Financial Crimes Enforcement Network (FinCEN)

FinCEN Designation of Exempt Person (FinCEN DOEP | Form 110) Electronic Filing Requirements

XML Schema 2.0

User Guide

DEPARTMENT OF THE TREASURY

FINANCIAL CRIMES ENFORCEMENT NETWORK (FINCEN)

0. Revision History

Version Number	Date	Change Description
1.0	March 2019	Initial version

1.1	10/1/2019	FinCEN DOEP XML Element Requirements
		• RawStateCodeText
		  ○ Modified the element Description, Value Restrictions, Remarks, and Example to emphasize that all entries for this element must correspond with a valid U.S. State/Territory with the exception of the Transmitter party address, which allows Canadian and Mexican State/Territory/Province entries in addition to U.S. State/Territory entries.
		Party Elements by Party Type
		• Modified the table to remove the bullets associating the RawIndividualTitleText element with the Transmitter (35) and Transmitter Contact (37) party types (this element should only be associated with the Authorized Official (3) party type).
		Electronic XML Filing Instructions (Attachment C)
		• General Instructions: 5. Addresses
		  ○ Added the following note at the end of the instructions: "NOTE: The ISO 3166-2 country list contains the code "UM" that stands for the United State Minor Outlying Islands. Using "UM" in country fields is prohibited. These islands are uninhabited. As such they have no addresses."
		Attachment E – Sample Data (New)
		• Added new Attachment E – Sample Data section to the XML User Guide. It includes a link to sample data corresponding with this form type.

Contents

0. Revision History ... iii
Contents ... iv
1. Introduction ... 1
2. FinCEN DOEP XML Schema Overview ... 1
2.1. File Organization ... 1
2.1.1. XML declaration (prolog) ... 1
2.1.2. EFilingBatchXML ... 1
2.1.3. Activity ... 2
2.1.4. Party ... 2
2.1.5. DesignationExemptActivity ... 4
3. FinCEN DOEP XML Batch Reporting Requirements ... 4
3.1. Element Definition Overview ... 4
3.2. Batch Validation (Form & Fit) Overview ... 5
4. FinCEN DOEP XML Element Requirements ... 6
4.1. XML declaration/prolog ... 6
4.2. EFilingBatchXML Elements ... 6
4.3. Activity Elements ... 7
4.4. ActivityAssociation Elements ... 10
4.5. Party Elements ... 12
4.5.1. PartyName Elements ... 16
4.5.2. Address Elements ... 22
4.5.3. PhoneNumber Elements ... 27
4.5.4. PartyIdentification Elements ... 29
4.5.5. PartyOccupationBusiness Elements ... 33
4.5.6. ElectronicAddress Elements ... 34
4.6. DesignationExemptActivity Elements ... 36
5. Party Elements by Party Type ... 38
5.1. Party Record Examples ... 39
5.1.1. Transmitter ... 39
5.1.2. Transmitter Contact ... 39
5.1.3. Exempt Party ... 39
5.1.4. Exempt Filer Bank ... 40
5.1.1. Exempt Affiliated Bank ... 40
5.1.1. Authorized Official ... 41
6. FinCEN DOEP XML Acknowledgement Format ... 42

6.1. XML File Structure 42
6.1.1. XML declaration/prolog 42
6.1.2. EFilingBatchXML 42
6.1.3. EFilingSubmissionXML 43
6.1.4. EFilingActivityXML 43
6.1.5. EFilingActivityErrorXML 44
6.2. Acknowledgement XML Example 46
7. Attachment A – Error Descriptions 47
7.1. General errors 47
7.2. Document Errors 48
7.3. Exempt Person (Part II) Errors 49
7.4. Filer (Part III) & Affiliated Bank Errors 50
7.5. Transmitter & Transmitter Contact Errors 50
8. Attachment B – Error Correction Instructions 52
9. Attachment C – Electronic XML Filing Instructions 54
10. Attachment D – Secure Data Transfer Mode Filers 58
11. Attachment E – Sample Data 59

1. Introduction

The FinCEN Designation of Exempt Person (FinCEN DOEP | Form 110) Electronic Filing Requirements XML Schema 2.0 User Guide outlines the business and validation rules to support the electronic batch transmission of the FinCEN DOEP. Electronic filing of this report will be through the Bank Secrecy Act (BSA) E-Filing System operated by the Financial Crimes Enforcement Network (FinCEN). BSA E-Filing users who intend to file the FinCEN DOEP batch XML should be familiar with FinCEN regulations, Extensible Markup Language (XML) and the FinCEN XML schemas. For more information, please go to bsaefiling.fincen.treas.gov.

2. FinCEN DOEP XML Schema Overview

Before you begin submitting your BSA data to FinCEN's BSA E-Filing System (bsaefiling.fincen.treas.gov) via XML batch, you must first review the required schemas to assist you with constructing and testing your XML batch file.. These schemas define the requirements by which the FinCEN DOEP XML batch file must be constructed, such as which elements are required and which are not required, what are the appropriate values you may enter for certain elements, and what sequence the elements should appear in when building the batch. Please visit https://www.fincen.gov/sites/default/files/schema/base/EFL_DOEPXBatchSchema.xsd to access the FinCEN XML 2.0 batch schema file.

2.1. File Organization

This section describes the general formatting requirements for FinCEN DOEP XML batch reporting. The diagrams that follow provide a visual representation of the XML batch file layout from a high-level perspective.

2.1.1. XML declaration (prolog)

The XML declaration specifies the XML version and character encoding used in the file. It must appear on the first line of the file.

2.1.2. EFilingBatchXML

This is the root element and serves as the container for all FinCEN DOEP documents recorded in the batch. It must be the first element recorded in the file.

The EFilingBatchXML element is parent to the <Activity> element. This complex element is the container for each FinCEN DOEP document in the batch. All BSA data related to a single FinCEN DOEP document must be recorded within the <Activity> element. The count of <Activity> elements in the batch will depend on the count of FinCEN DOEP documents being reported.

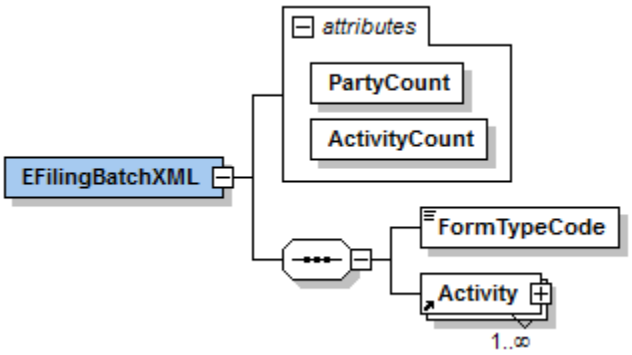

2.1.3. Activity

Each FinCEN DOEP document in the batch must begin with the <Activity> element. This element identifies all information related to a single FinCEN DOEP. This information includes the transmitter of the batch file, the transmitted contact, the exempt person, the filer, the affiliated bank (if any), the authorized official, and any details about the type of designation being filed. There is no limit to the number of <Activity> elements that may be recorded in the batch. However, the total size of the batch file must not exceed 60MB.

The <Activity> element is parent to the following complex element(s):

- **ActivityAssociation.** This element is the container for the type of filing (i.e. Initial designation, Exemption amended, or Exemption revoked) for the FinCEN DOEP.
- **Party.** This element is the container for any person (individual or entity) associated with the FinCEN DOEP, specifically, the transmitter [of the batch file], the transmitter contact, the exempt person, the filer, the affiliated bank (if any), and the authorized official.
- **DesignationExemptActivity.** This element is the container for the type of exempt person and the effective date of the exemption.

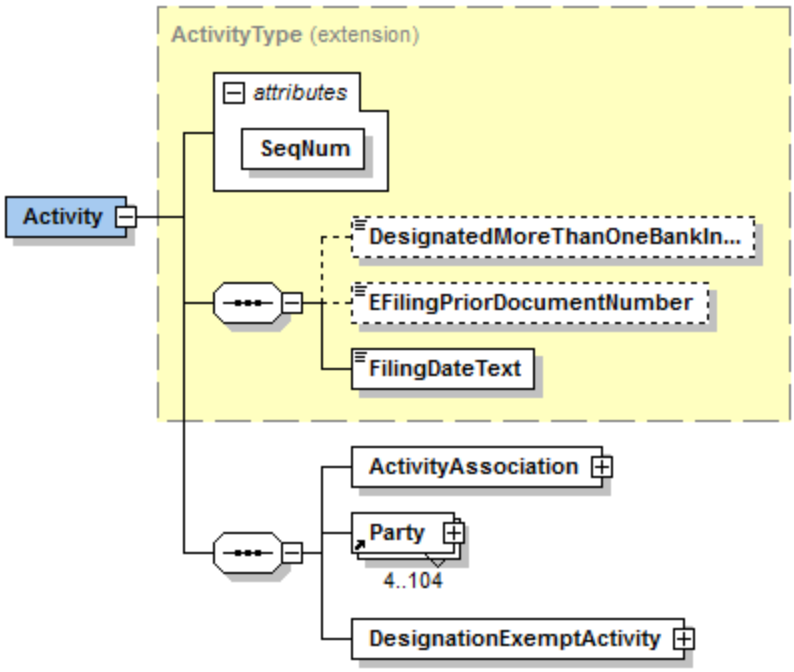

2.1.4. Party

Each FinCEN DOEP activity in the batch must include a separate Party element identifying the following persons:

- Transmitter (required, one only).
- Transmitter Contact (required, one only).
- Exempt Party (required, one only).
- Exempt Filer Bank (required, one only).
- Exempt Affiliated Bank (required if known, multiples permitted up to 99).
- Authorized Official (required if known, one only).

A maximum occurrence of 104 total Party elements may be recorded at the activity level for each FinCEN DOEP activity in the batch.

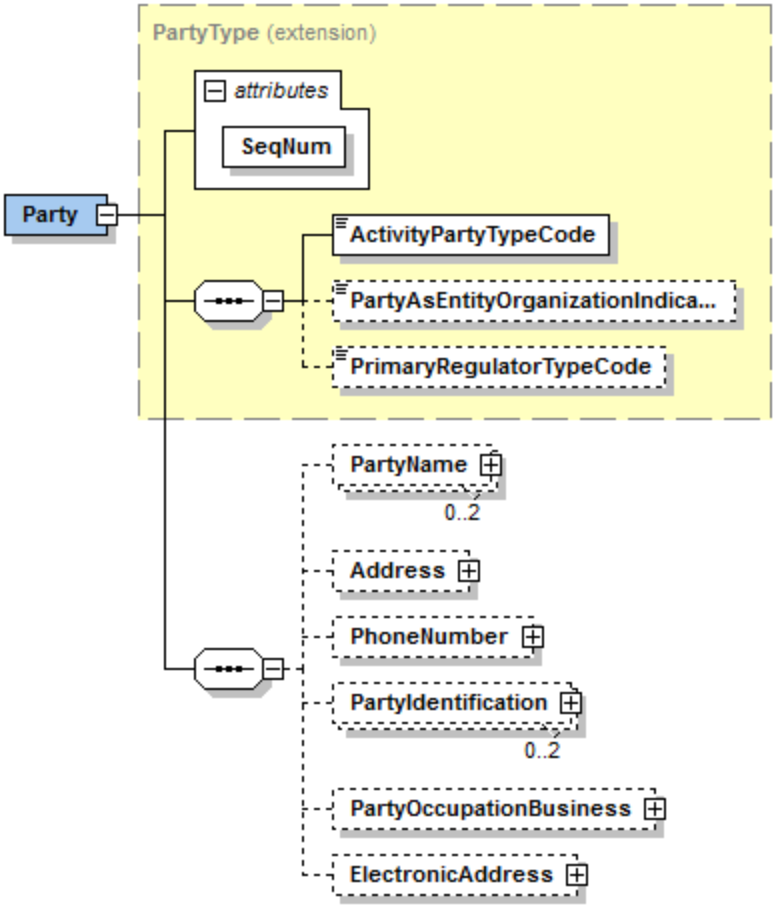

Transmitter (Required | 1)

This is the person (individual or entity) handling the data accumulation and formatting of the batch file. Each FinCEN DOEP Activity element in the batch must include a Party element that identifies the batch transmitter. The Transmitter telephone number must relate to the individual recorded as the Transmitter Contact. *The batch transmitter should be identical for each FinCEN DOEP.* There must be one occurrence of this party for each FinCEN DOEP Activity in the batch.

Transmitter Contact (Required | 1)

This is the official contact individual for the transmitter. Each FinCEN DOEP Activity element in the batch must include a Party element that identifies the point of contact for the batch transmitter. *The transmitter contact should be identical for each FinCEN DOEP.* There must be one occurrence of this party for each FinCEN DOEP Activity in the batch.

Exempt Party (Required | 1)

This is the person (individual or entity) to be designated as exempt. There must be one occurrence of this party for each FinCEN DOEP Activity in the batch. This party corresponds with Part II of the FinCEN DOEP.

Exempt Filer Bank (Required | 1)

This is the bank that is filing the FinCEN DOEP. There must be one occurrence of this party for each FinCEN DOEP Activity in the batch. This party corresponds with Part III of the FinCEN DOEP.

Exempt Affiliated Bank (Required if known | 0-99)

This is the bank subsidiary that will treat the customer as an exempt person. There can be up to 99 occurrences of this party for each FinCEN DOEP Activity in the batch. This party corresponds with the Affiliated Bank section of the FinCEN DOEP.

Authorized Official (Required if known | 0-1)

This is the name, title, and telephone number of the official who is authorized to review and approve the transmission of the FinCEN DOEP. There may only be one occurrence of this party for each FinCEN DOEP Activity in the batch. This party corresponds with Part IV of the FinCEN DOEP.

2.1.5. DesignationExemptActivity

As the container for information about the details of the FinCEN DOEP, this element identifies type of exempt person and the effective date of the exemption associated with the FinCEN DOEP. This element must be recorded after the final Party element is recorded for the FinCEN DOEP. There must only be one occurrence of this element for each FinCEN DOEP Activity in the batch. This element corresponds with Part I (Item 2) and Part II (Item 16) of the FinCEN DOEP.

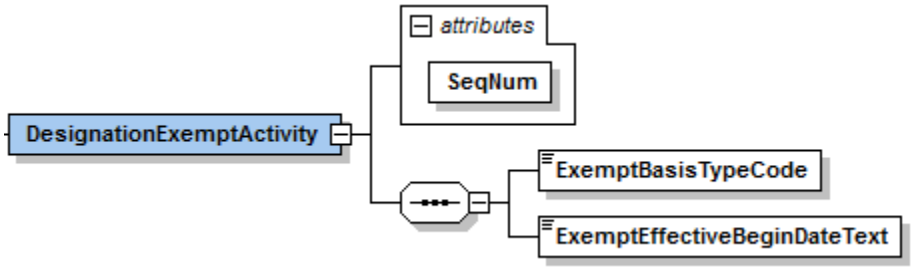

3. FinCEN DOEP XML Batch Reporting Requirements

This section describes in detail the reporting requirements for each element in the FinCEN DOEP batch.

3.1. Element Definition Overview

Each element in this user guide is defined using the following terms:

Item	Description
Element Name	This is the name that must be used when recording the element.
minOccurs/maxOccurs	This defines the number of times the element can occur for the parent element. • **MinOccurs**. The minimum number of times this element may be recorded for the parent element (e.g. minOccurs=0 means this element is only required under certain conditions while minOccurs=1 means at least one of the element must be recorded for the parent element in the FinCEN DOEP). • **MaxOccurs**. The maximum number of times this element may be recorded for the parent element (e.g. maxOccurs=99 means this element can occur up to 99 times in the same FinCEN DOEP).
Description	This is the summary description of the element. Included in the description is a list of sub-elements associated with the element (if applicable) as well as any special requirements for when (and when not) to record the element.
Attribute(s)	This specifies the attribute(s) that are required to be recorded for the element. Various elements contain the **SeqNum** attribute used to identify the associated element in the batch file. The value recorded for this attribute must be numeric and unique.
Parent Element	This identifies the element's container element. The <Parent> element contains sub elements and is considered a complex element.

Item	Description
Element Restriction(s)	This specifies the requirement level for the element; specifically, under what conditions the element should be recorded. Elements that must be recorded will be labeled as "Required", for example "Required. This element must be recorded." Elements that are required based on certain conditions will indicate the conditions upon which the element must be recorded, for example "Record this element when the party type is associated with the Exempt Party; Otherwise, do not record this element." NOTE: If neither of the above restrictions are specified for the element, then the element is not required. However, a field that is not required does not mean that it is optional. All fields require an entry when the filer has the relevant data. This specifies any requirements and/or restrictions involving the value recorded for the element.
Value Restriction(s)	This specifies any requirements and/or restrictions involving the value recorded for the element.
Remarks	This specifies any additional information about the element to assist with reporting; including: • Reporting conditions that may result in a batch rejection. • Reporting conditions that may result in a batch accepted with warnings.

Example	This provides one or more examples of how to record the element.
	
	PLEASE BE ADVISED: Most element examples are of scenarios where data is recorded; however, there are valid scenarios where the element may be recorded with a null value or not recorded at all when unknown or not applicable (see examples below):
	
	• SCENARIO: When NOT to record the element (e.g. "…otherwise, do not record this element.") *What this means*: The element tag should not be recorded unless the condition described in the Element Restrictions is present.
	
	• SCENARIO: When NULL is an acceptable value (e.g. "The value recorded is not equal to Y or is not equal to null.") What this means: The element tag may be recorded without a value and still be considered valid. For example:
	  ○ <fc2:ExemptionRevokedIndicator/>
	  ○ <fc2:ExemptionRevokedIndicator></fc2:ExemptionRevokedIndicator>
	
	NOTE: Although the above scenarios are technically valid, it is best practice to omit the element rather than record it with no value.

IMPORTANT: FinCEN strongly encourages that filers first test their XML batch files for schema compliance using the schemas available at www.fincen.gov/base. Your batch file should pass schema validation before you attempt to submit to FinCEN. Otherwise, it will be at risk of being rejected.

3.2. Batch Validation (Form & Fit) Overview

It is important to note that if the batch file does not adhere to the basic format described in this guide in accordance with the FinCEN DOEP XML batch schema, then the batch will fail schema validation and will not be accepted by FinCEN.

Here is a list of general schema requirements that your batch must adhere to in addition to the data requirements described for each element throughout this guide. These schema requirements apply to all elements in the batch:

- Element names must include the prefix "fc2" in both the opening tag and closing tag.
- Element names must be spelled correctly and in the correct case. Do NOT included spaces at the beginning or ending of the element names.
- Elements must have a matching closing tag (which includes a self-closing tag in the event that no value is recorded for the element).
- Elements must be in the correct sequence.
- Elements must be recorded when the minOccurs=1 (or greater than 1).
- Elements must not be recorded more than the maxOccurs value for the associated <Parent> element.
- Element values must not exceed the maximum specified character limit.
- Element values must not include leading and/or trailing spaces.
- Element values must not include non-printable characters, such as carriage returns, line feeds, and tabs.

4. FinCEN DOEP XML Element Requirements

The following defines each element in the FinCEN DOEP XML batch in the order in which they can be recorded.

4.1. XML declaration/prolog

Element Name:	?xml	minOccurs:	1	maxOccurs:	1
Description:	XML declaration/prolog. This is the XML declaration which specifies the XML version and character encoding used in the file. The XML declaration must appear on the first line of the file.				
Attribute(s):	The following data must be recorded for XML declaration/prolog: Name: Description version: The version number of the XML. The value recorded must be "1.0" encoding: The character encoding, which must be UTF-8, used for the XML. The value recorded must be "UTF-8"				
Parent Element:	n/a				
Element Restriction(s):	This declaration must be recorded.				
Value Restriction(s):	The value provided must conform to the following requirements: • <?xml version="1.0" encoding="UTF-8"?>				
Remarks:	The batch submission will be rejected if any of the following conditions are true: • The XML declaration/prolog is not recorded with the required values (see Value Restriction(s) above) or it is not recorded on the first line of the batch file.				
Example:	<?xml version="1.0" encoding="UTF-8"?>				

4.2. EFilingBatchXML Elements

Element Name:	EFilingBatchXML	minOccurs:	1	maxOccurs:	1
Description:	XML batch (header). This is the container for the contents of the batch file. This element is the root element in the FinCEN DOEP XML batch file and the container element for all FinCEN DOEP forms included in the batch. As the root element, it must be the first element recorded in the file, directly following the XML declaration/prolog. The following sub-elements are associated with this element: Name: minOccurs: maxOccurs: Category FormTypeCode: 1: 1: Simple Activity: 1: unbounded: Complex				
Attribute(s)	The following attributes must be recorded for this element: Name: Description ActivityCount: The count of all <Activity> elements in the batch				

Element Name:	EFilingBatchXML	minOccurs:	1	maxOccurs:	1
	PartyCount	The count of all <Party> elements in the batch where the <ActivityPartyTypeCode> is equal to 3, 11, 12, and 45 (combined)			
	xsi:schemaLocation	www.fincen.gov/base https://www.fincen.gov/base/EFL_DOEPXBatchSchema.xsd			
	xmlns:xsi	http://www.w3.org/2001/XMLSchema-instance			
	xmlns:fc2	www.fincen.gov/base			
	NOTE: All attributes must be present, but their order is not important.				
Parent Element:	n/a				
Element Restriction(s):	This element must be recorded.				
Value Restriction(s):	n/a				
Remarks:	The batch submission will be rejected if any of the following conditions are true: • The element is not recorded. • One or more of the attributes are missing, incorrectly formatted, or contain an invalid value. • The reported attribute count does not match the actual count.				
Example:	<fc2:EFilingBatchXML ActivityCount="6" PartyCount="17" xmlns:xsi="http://www.w3.org/2001/XMLSchema-instance" xmlns:fc2="www.fincen.gov/base" xsi:schemaLocation="www.fincen.gov/base https://www.fincen.gov/base/EFL_DOEPXBatchSchema.xsd">				

Element Name:	FormTypeCode	minOccurs:	1	maxOccurs:	1
Description:	Form type (code). This element identifies the type of form being reported in the batch.				
Attribute(s)	n/a				
Parent Element:	EFilingBatchXML				
Element Restriction(s):	This element must be recorded.				
Value Restriction(s):	The value provided must equal: DOEPX				
Remarks:	The batch submission will be rejected if any of the following conditions are true: • The element is not recorded. • The value is null or not equal to DOEPX.				
Example:	<fc2:FormTypeCode>DOEPX</fc2:FormTypeCode>				

Element Name:	Activity	See *Activity Elements* for details.

4.3. Activity Elements

Element Name:	Activity	minOccurs:	1	maxOccurs:	unbounded
Description:	Activity (header). This is the container for all information related to the FinCEN DOEP. The first <Activity> element in the batch file must directly follow the <FormTypeCode> element. The batch must contain at least one occurrence of this element. There is no maximum occurrence value set for this element; however, the total size of the batch file must not exceed 60MB. The following sub-elements are associated with this element:				

Name	minOccurs	maxOccurs	Category
DesignatedMoreThanOneBankIndicator (Item 25)	0	1	Simple
EFilingPriorDocumentNumber (Item 1 - BSA Identifier)	0	1	Simple
FilingDateText (Item 30)	1	1	Simple
ActivityAssociation (Item 1)	1	1	Complex
Party (Part II, III, Part IV, Transmitter/Trans. contact)	4	104	Complex
DesignationExemptActivity	1	1	Complex

Element Name:	Activity	minOccurs:	1	maxOccurs:	unbounded
Attribute(s)	The following attributes must be recorded for this element: Name: SeqNum Description: The value recorded for this attribute must be numeric and unique. It may contain any numeric value up to 19 characters in length.				
Parent Element:	EFilingBatchXML				
Element Restriction(s):	This element must be recorded.				
Value Restriction(s):	n/a				
Remarks:	The batch submission will be rejected if any of the following conditions are true: • The element is not recorded. • The element is missing a "SeqNum" attribute. • The element contains a "SeqNum" attribute with a duplicate or invalid value. • The element is self-closing (i.e. no sub-elements are recorded)				
Example:	<fc2:Activity SeqNum="1"> <fc2:DesignatedMoreThanOneBankIndicator>Y</fc2:DesignatedMoreThanOneBankIndicator> <fc2:FilingDateText>20190110</fc2:FilingDateText> <fc2:ActivityAssociation SeqNum="7">				

Element Name:	DesignatedMoreThanOneBankIndicator	minOccurs:	0	maxOccurs:	1
Description:	Designation made for affiliated bank(s) (indicator). This element indicates that a parent bank or financial holding company (or one of its bank subsidiaries) is making the designation of exempt person on behalf of some or all bank subsidiaries of the holding company. This element corresponds with the following item(s): • 25. Affiliated bank *Please refer to Attachment C Item 25 instructions for additional information regarding this element.*				
Attribute(s)	n/a				
Parent Element:	Activity				
Element Restriction(s):	Record this element when the designation is also being made for one or more affiliated banks; otherwise, do not record this element.				
Value Restriction(s):	The value provided must conform to the following requirements: Must equal Y				
Remarks:	The batch submission will be rejected if any of the following conditions are true: • The element is not null and contains a value not equal to "Y" The batch submission will be accepted with warning if any of the following conditions are true: • The element is recorded with a Y value but there is no Exempt Affiliated Bank party type recorded for the FinCEN DOEP. • The element is not recorded with a Y value and there is one or more Exempt Affiliated Bank party types recorded for the FinCEN DOEP.				
Example:	The FinCEN DOEP contains one or more affiliated banks: <fc2:DesignatedMoreThanOneBankIndicator>Y</fc2:DesignatedMoreThanOneBankIndicator> The FinCEN DOEP does not contain an affiliated bank: *Do not record this element.*				

Element Name:	EFilingPriorDocumentNumber	minOccurs:	0	maxOccurs:	1
Description:	Prior report BSA Identifier (number). This element identifies the BSA Identifier (BSA ID) of the previously-filed FinCEN DOEP when filing an amended or revoked exemption. This element corresponds with the following item(s): • 1. BSA Identifier				

Element Name:	EFilingPriorDocumentNumber	minOccurs:	0	maxOccurs:	1
Attribute(s)	n/a				
Parent Element:	Activity				
Element Restriction(s):	Record this element when the FinCEN DOEP being filed amends or revokes a prior exemption; otherwise, do not record this element.				
Value Restriction(s):	The value provided must conform to the following requirements: 14-digit numeric BSA ID (if known); 14 consecutive zeros, i.e. "00000000000000" (if the BSA ID is unknown).				
Remarks:	The batch submission will be rejected if any of the following conditions are true: • The element is recorded but without a value (i.e. the value is null). • The value recorded contains non-numeric characters. • The value recorded is not a valid BSA Identifier, or not 14 zeros (0) when the prior FinCEN DOEP BSA Identifier is unknown. The batch submission will be accepted with warning if any of the following conditions are true: • The element is not recorded and ExemptionAmendedIndicator contains a Y value. • The element is not recorded and ExemptionRevokedIndicator contains a Y value. • The element is recorded with a valid value and InitialDesignationIndicator contains a Y value.				
Example:	The FinCEN DOEP amends or revokes a prior exemption and the BSA ID is known: <fc2:EFilingPriorDocumentNumber>31000000000001</fc2:EFilingPriorDocumentNumber> The FinCEN DOEP amends or revokes a prior exemption and the BSA ID is unknown: <fc2:EFilingPriorDocumentNumber>00000000000000</fc2:EFilingPriorDocumentNumber> OR <fc2:EFilingPriorDocumentNumber>0</fc2:EFilingPriorDocumentNumber> The FinCEN DOEP is an initial designation: *Do not record this element.*				

Element Name:	FilingDateText	minOccurs:	1	maxOccurs:	1
Description:	Date of signature (date). This element identifies the date in which the FinCEN DOEP is signed and filed electronically through FinCEN's BSA E-Filing System. This element corresponds with the following item(s): • 30. Date of signature				
Attribute(s)	n/a				
Parent Element:	Activity				
Element Restriction(s):	This element must be recorded.				
Value Restriction(s):	The value provided must conform to the following requirements: 8 numeric characters in the format YYYYMMDD where YYYY = year, MM = month, and DD = day. Single digit days or months must be prefaced by a zero.				
Remarks:	The batch submission will be rejected if any of the following conditions are true: • The element is not recorded. • The element is recorded but without a value (i.e. the value is null). • The value recorded for the element is not a valid date in the format YYYYMMDD. The batch submission will be accepted with warning if any of the following conditions are true: • The value recorded is a date greater than the current date or less than January 1, 2000.				
Example:	<fc2:FilingDateText>20190201</fc2:FilingDateText>				

Element Name:	ActivityAssociation	See *ActivityAssociation Elements* for details.

Element Name:	Party	See *Party Elements* for details.

Element Name:	DesignationExemptActivity	See *DesignationExemptActivity Elements* for details.

4.4. ActivityAssociation Elements

Element Name:	ActivityAssociation	minOccurs:	1	maxOccurs:	1

Description:	Type of filing (header). This element is the container for information about the type of filing associated with the FinCEN DOEP. The following sub-elements are associated with this element:
	
	Name | minOccurs | maxOccurs | Category
	ExemptionAmendedIndicator | 0 | 1 | Simple
	ExemptionRevokedIndicator | 0 | 1 | Simple
	InitialDesignationIndicator | 0 | 1 | Simple
	
	**Only one of the above sub-elements must be recorded with a "Y" value.*
	
	This element corresponds with the following item(s):
	• 1. Type of filing
	  ○ 1a. Initial designation
	  ○ 1b. Exemption amended
	  ○ 1c. Exemption revoked
	Please refer to Attachment C for additional information regarding the above item(s).				

Attribute(s)	The following attributes must be recorded for this element: Name | Description SeqNum | The value recorded for this attribute must be numeric and unique. It may contain any numeric value up to 19 characters in length.				
Parent Element:	Activity				
Element Restriction(s):	This element must be recorded.				
Value Restriction(s):	n/a				
Remarks:	The batch submission will be rejected if any of the following conditions are true: • The element is not recorded. • The element is missing a "SeqNum" attribute. • The element contains a "SeqNum" attribute with a duplicate or invalid value. • The element is recorded but there are no sub-elements recorded. • There is no sub-element recorded with a Y value. • More than one sub-element is recorded with a Y value.				
Example:	The FinCEN DOEP is an initial designation: <fc2:ActivityAssociation SeqNum="7"> <fc2:InitialDesignationIndicator>Y</fc2:InitialDesignationIndicator> </fc2:ActivityAssociation> The FinCEN DOEP is an amended designation: <fc2:ActivityAssociation SeqNum="7"> <fc2:ExemptionAmendedIndicator>Y</fc2:ExemptionAmendedIndicator> </fc2:ActivityAssociation> The FinCEN DOEP revokes a designation: <fc2:ActivityAssociation SeqNum="7"> <fc2:ExemptionRevokedIndicator>Y</fc2:ExemptionRevokedIndicator> </fc2:ActivityAssociation>				

Element Name:	ExemptionAmendedIndicator	minOccurs:	0	maxOccurs:	1
Description:	Exemption amended (indicator). This element declares that the FinCEN DOEP being filed amends a prior designation. This element corresponds with the following item(s):				

Element Name:	ExemptionAmendedIndicator	minOccurs:	0	maxOccurs:	1
	• 1b. Exemption amended *Please refer to Attachment C for additional information regarding the above item(s).*				
Attribute(s)	n/a				
Parent Element:	ActivityAssociation				
Element Restriction(s):	Record this element when the FinCEN DOEP being filed amends a prior designation; otherwise, do not record this element. If this element is recorded, the following element must also be recorded with a valid value: • <EFilingPriorDocumentNumber>				
Value Restriction(s):	The value provided must conform to the following requirements: Must equal Y				
Remarks:	The batch submission will be rejected if any of the following conditions are true: • The element is not null and contains a value not equal to "Y"				
Example:	<fc2:ExemptionAmendedIndicator>Y</fc2:ExemptionAmendedIndicator>				

Element Name:	ExemptionRevokedIndicator	minOccurs:	0	maxOccurs:	1
Description:	Exemption revoked (indicator). This element declares that the FinCEN DOEP being filed revokes a prior designation. This element corresponds with the following item(s): • 1c. Exemption revoked *Please refer to Attachment C for additional information regarding the above item(s).*				
Attribute(s)	n/a				
Parent Element:	ActivityAssociation				
Element Restriction(s):	Record this element when the FinCEN DOEP being filed revokes a prior designation; otherwise, do not record this element. If this element is recorded, the following element must also be recorded with a valid value: • <EFilingPriorDocumentNumber>				
Value Restriction(s):	The value provided must conform to the following requirements: Must equal Y				
Remarks:	The batch submission will be rejected if any of the following conditions are true: • The element is not null and contains a value not equal to "Y"				
Example:	<fc2:ExemptionRevokedIndicator>Y</fc2:ExemptionRevokedIndicator>				

Element Name:	InitialDesignationIndicator	minOccurs:	0	maxOccurs:	1
Description:	Initial designation (indicator). This element declares that the FinCEN DOEP being filed is the first designation report for the individual or entity to be exempt. This element corresponds with the following item(s): • 1a. Initial designation *Please refer to Attachment C for additional information regarding the above item(s).*				
Attribute(s)	n/a				
Parent Element:	ActivityAssociation				
Element Restriction(s):	Record this element when the FinCEN DOEP being filed is the initial designation report for the individual or entity to be exempt; otherwise, do not record this element.				
Value Restriction(s):	The value provided must conform to the following requirements: Must equal Y				
Remarks:	The batch submission will be rejected if any of the following conditions are true: • The element is not null and contains a value not equal to "Y"				
Example:	<fc2:InitialDesignationIndicator>Y</fc2:InitialDesignationIndicator>				

4.5. Party Elements

Element Name:	Party	minOccurs:	4	maxOccurs:	104

Description:

Party (header). This is the container for information about the individual or entity associated with the FinCEN DOEP; specifically:

- Transmitter (required, one only).
- Transmitter Contact (required, one only).
- Exempt Party (required, one only).
- Exempt Filer Bank (required, one only).
- Exempt Affiliated Bank (required if applicable, multiples permitted up to 99).
- Authorized Official (required if known, one only).

The following tables describe all possible sub-elements for each party type at the activity level:

Activity party type code definitions
35 = Transmitter | 37 = Transmitter Contact | 3 = Authorized Official
11 = Exempt Party | 45 = Exempt Filer Bank | 12 = Exempt Affiliated Bank

1. Transmitter Information (Required | Batch Transmitter Information | 1 occurrence)

Name	minOccurs	maxOccurs	Content
ActivityPartyTypeCode (Code 35)	1	1	Simple
PartyName	1	1	Complex
Address	1	1	Complex
PhoneNumber	1	1	Complex
PartyIdentification	1	1	Complex

2. Transmitter Contact Information (Required | Batch Transmitter Information | 1 occurrence)

Name	minOccurs	maxOccurs	Content
ActivityPartyTypeCode (Code 37)	1	1	Simple
PartyName	1	1	Complex

3. Exempt Party (Required | Part II, Items 3-15 | 1 occurrence)

Name	minOccurs	maxOccurs	Content
ActivityPartyTypeCode (Code 11)	1	1	Simple
PartyAsEntityOrganizationIndicator (Item 3)	0	1	Simple
PartyName (Items 3-6)	1	2	Complex
Address (Items 8-11)	1	1	Complex
PhoneNumber (Items 15, 15a)	0	1	Complex
PartyIdentification (Items 12-13)	1	1	Complex
PartyOccupationBusiness (Items 7, 7a)	0	1	Complex
ElectronicAddress (Item 14)	0	1	Complex

4. Exempt Filer Bank (Required | Part III, Items 17-24 | 1 occurrence)

Name	minOccurs	maxOccurs	Content
ActivityPartyTypeCode (Code 45)	1	1	Simple
PrimaryRegulatorTypeCode (Item 24)	1	1	Simple
PartyName (Item 17)	1	1	Complex
Address (Items 20-23)	1	1	Complex

Element Name:	Party	minOccurs:	4	maxOccurs:	104

PartyIdentification (Item 18-19)	1	2	Complex

5. Exempt Affiliated Bank (Required if applicable | Part III (Affiliated Bank), Items 17-24 | 1-99 occurrences)

Name	minOccurs	maxOccurs	Content
ActivityPartyTypeCode (Code 12)	1	1	Simple
PrimaryRegulatorTypeCode (Item 24)	1	1	Simple
PartyName (Item 17)	1	1	Complex
Address (Items 20-23)	1	1	Complex
PartyIdentification (Item 18-19)	1	2	Complex

6. Authorized Official (Required if available | Part IV, Items 26-29a | 0-1 occurrence)

Name	minOccurs	maxOccurs	Content
ActivityPartyTypeCode (Code 3)	1	1	Simple
PartyName (Item 26-27)*	0	1	Complex
PhoneNumber (Items 29, 29a)*	0	1	Complex

**If the Authorized Official party type is recorded, then the PartyName and/or PhoneNumber data must be provided in addition to the ActivityPartyTypeCode.*

Attribute(s)

The following attributes must be recorded for this element:

Name	Description
SeqNum	The value recorded for this attribute must be numeric and unique. It may contain any numeric value up to 19 characters in length.

Parent Element: Activity

Element Restriction(s):

Required. This element must be recorded.

The following table describes the minimum and maximum reporting requirements per FinCEN DOEP document by party type:

Party type	minOccurs	maxOccurs
Transmitter	1	1
Transmitter Contact	1	1
Exempt Party	1	1
Exempt Filer Bank	1	1
Exempt Affiliated Bank	0	99
Authorized Official	0	1
Total (*per document*)	4	104

Value Restriction(s): n/a

Remarks:

The batch submission will be rejected if any of the following conditions are true:

- The minimum number of party elements are not recorded or are incorrectly formatted.
- The element is missing a "SeqNum" attribute.
- The element contains a "SeqNum" attribute with a duplicate or invalid value.
- The following party types are not recorded or exceed the maximum occurrence for the FinCEN DOEP:
  - Transmitter (1 occurrence)
  - Transmitter Contact (1 occurrence)
  - Exempt Party (1 occurrence)

Element Name:	Party	minOccurs:	4	maxOccurs:	104
	○ Exempt Filer Bank (1 occurrence) • More than the maximum occurrence of a particular party type is recorded.				
Example:	See 5. Party Elements by Party Type for detailed examples of each party type.				

Element Name:	ActivityPartyTypeCode	minOccurs:	1	maxOccurs:	1
Description:	Activity party type (code). This element identifies the type of party associated with the FinCEN DOEP.				
Attribute(s)	n/a				
Parent Element:	Party				
Element Restriction(s):	Required. Each Party element must include this element (ActivityPartyTypeCode) with a valid code.				
Value Restriction(s):	The value provided must conform to the following requirements: Code: Description 35: Transmitter 37: Transmitter Contact 11: Exempt Party 45: Exempt Filer Bank 12: Exempt Affiliated Bank 3: Authorized Official				
Remarks:	The batch submission will be rejected if any of the following conditions are true: • The element is not recorded. • The element is recorded but with no value (i.e. the value is null). • The element contains an invalid value.				
Example:	<fc2:ActivityPartyTypeCode>11</fc2:ActivityPartyTypeCode>				

Element Name:	PartyAsEntityOrganizationIndicator	minOccurs:	0	maxOccurs:	1
Description:	Exempt person as entity (indicator). This element declares that the exempt person is an entity. This element corresponds with the following item: • Check here if entity				
Attribute(s)	n/a				
Parent Element:	Party				
Element Restriction(s):	Record this element when the party type is associated with the Exempt Party and the party is an entity; otherwise, do not record this element.				
Value Restriction(s):	The value provided must conform to the following requirements: Must equal Y				
Remarks:	The batch submission will be rejected if any of the following conditions are true: • The element is recorded for an inappropriate party type (see Element Restrictions for more information). • The element is not null and contains a value not equal to "Y"				
Example:	The exempt person is an entity: <fc2:PartyAsEntityOrganizationIndicator>Y</fc2:PartyAsEntityOrganizationIndicator> The exempt person is an individual: *Do not record this element.*				

Element Name:	PrimaryRegulatorTypeCode	minOccurs:	0	maxOccurs:	1
Description:	Primary regulator type (code). This element identifies the bank's primary federal regulator or BSA examiner. This element corresponds with the following item: • 24. Primary federal regulator *Please refer to Attachment C for additional information regarding the above item(s).*				
Attribute(s)	n/a				
Parent Element:	Party				
Element Restriction(s):	Record this element when the party type is associated with the Exempt Filer Bank and the Exempt Affiliated Bank; otherwise, do not record this element.				
Value Restriction(s):	The value provided must adhere to the following requirements: Code: Description 1: FRB (Federal Reserve Board) 2: FDIC (Federal Deposit Insurance Corporation) 7: IRS (Internal Revenue Service) 3: NCUA (National Credit Union Administration) 4: OCC (Office of the Comptroller of the Currency)				
Remarks:	The batch submission will be rejected if any of the following conditions are true: • The element is recorded for a party type that not equal to the Exempt Filer Bank or the Exempt Affiliated Bank. • The element is recorded but with no value (i.e. the value is null). • The element contains an invalid value. The batch submission will be accepted with warning if any of the following conditions are true: • The element is not recorded for the Exempt Filer Bank or the Exempt Affiliated Bank.				
Example:	<fc2:PrimaryRegulatorTypeCode>4</fc2:PrimaryRegulatorTypeCode>				

Element Name:	PartyName	See *PartyName Elements* for details.

Element Name:	Address	See *Address Elements* for details.

Element Name:	PhoneNumber	See *PhoneNumber Elements* for details.

Element Name:	PartyIdentification	See *PartyIdentification Elements* for details.

Element Name:	PartyOccupationBusiness	See *PartyOccupationBusiness Elements* for details.

Element Name:	ElectronicAddress	See *ElectronicAddress Elements* for details.

4.5.1. PartyName Elements

Element Name:	PartyName	minOccurs:	0	maxOccurs:	2

Description:

Party name (header). This is the container for information about the name of the party. The party name can be a legal name or doing business as (DBA) name, depending on the party type being identified.

The following sub-elements are associated with this element:

Activity party type code definitions
35 = Transmitter | 37 = Transmitter Contact | 3 = Authorized Official
11 = Exempt Party | 45 = Exempt Filer Bank | 12 = Exempt Affiliated Bank

1. Transmitter: Legal name (Required | 1 occurrence)

Name	minOccurs	maxOccurs	Content
PartyNameTypeCode (Code L)	1	1	Simple
RawPartyFullName	1	1	Simple

2. Transmitter Contact: Legal name (Required | 1 occurrence)

Name	minOccurs	maxOccurs	Content
PartyNameTypeCode (Code L)	1	1	Simple
RawPartyFullName	1	1	Simple

3. Exempt Party:
   a. Legal name (Required | Part II, Items 3-5 | 1 occurrence)

Name	minOccurs	maxOccurs	Content
PartyNameTypeCode (Code L)	1	1	Simple
RawEntityIndividualLastName (Item 3)	1	1	Simple
RawIndividualFirstName (Item 4)	0	1	Simple
RawIndividualMiddleName (Item 5)	0	1	Simple
RawIndividualNameSuffixText (Item 5)	0	1	Simple

   b. DBA name (Required if known | Part II, Item 6 | 0-1 occurrence)

Name	minOccurs	maxOccurs	Content
PartyNameTypeCode (Code DBA)	1	1	Simple
RawPartyFullName (Item 6)	1	1	Simple

4. Exempt Filer Bank: Legal name (Required | Part III, Item 17 | 1 occurrence)

Name	minOccurs	maxOccurs	Content
RawPartyFullName (Item 17)	1	1	Simple

5. Exempt Affiliated Bank: Legal name (Required if affiliated bank is recorded | Part III, Item 17 | 1 occurrence)

Name	minOccurs	maxOccurs	Content
RawPartyFullName (Item 17)	1	1	Simple

6. Authorized Official: Legal name and/or Title (Required if known | Part IV, Items 26-27 | 0-1 occurrence)

Name	minOccurs	maxOccurs	Content
RawIndividualTitleText (Item 27)*	0	1	Simple

Element Name:	PartyName	minOccurs:	0	maxOccurs:	2

RawPartyFullName (Item 26)*	0	1	Simple

**If the PartyName element is recorded for the Authorized Official party type, then at least one of the above elements must be recorded with data; if the Title (Item 27) and Print name (Item 26) are both unknown, then do not record the PartyName element for this Authorized Official party type.*

Attribute(s)

The following attributes must be recorded for this element:

Name	Description
SeqNum	The value recorded for this attribute must be numeric and unique. It may contain any numeric value up to 19 characters in length.

Parent Element: Party

Element Restriction(s):

Required. Record this element when reporting the name/title of a party. The following table describes the minimum and maximum reporting requirements per party type:

Party type	Legal (min-max)	DBA (min-max)
Transmitter	1-1	n/a
Transmitter contact	1-1	n/a
Exempt party	1-1	0-1
Exempt filer bank	1-1	n/a
Exempt affiliated bank (if recorded)	1-1	n/a
Authorized Official	0-1	n/a

Value Restriction(s): n/a

Remarks:

The batch submission will be rejected if any of the following conditions are true:

- The element is recorded for a valid party type, but all sub-elements are missing.
- The element is missing a "SeqNum" attribute.
- The element contains a "SeqNum" attribute with a duplicate or invalid value.
- More than one legal name is recorded for a single party type.
- More than one alternate name is recorded for the Exempt Party.
- An alternative name is recorded for a party type not equal to the Exempt Party.

The batch submission will be accepted with warning if any of the following conditions are true:

- The legal name is not recorded for one or more of the following party types:
  - Transmitter
  - Transmitter Contact
  - Exempt Party
  - Exempt Filer Bank
  - Exempt Affiliated Bank

Example:

Transmitter:

```
<fc2:PartyName SeqNum="18">
        <fc2:PartyNameTypeCode>L</fc2:PartyNameTypeCode>
        <fc2:RawPartyFullName>BSA Data Corporation</fc2:RawPartyFullName>
</fc2:PartyName>
```

Transmitter Contact:

```
<fc2:PartyName SeqNum="23">
        <fc2:PartyNameTypeCode>L</fc2:PartyNameTypeCode>
        <fc2:RawPartyFullName>Robert William</fc2:RawPartyFullName>
</fc2:PartyName>
```

Exempt Party (if entity):

```
<fc2:PartyName SeqNum="36">
```

Element Name:	PartyName	minOccurs:	0	maxOccurs:	2
	<fc2:PartyNameTypeCode>L</fc2:PartyNameTypeCode> <fc2:RawEntityIndividualLastName>Jay Bird Investments</fc2:RawEntityIndividualLastName> </fc2:PartyName> Exempt Party (if individual): <fc2:PartyName SeqNum="36"> <fc2:PartyNameTypeCode>L</fc2:PartyNameTypeCode> <fc2:RawEntityIndividualLastName>Johnson</fc2:RawEntityIndividualLastName> <fc2:RawIndividualFirstName>Mark</fc2:RawIndividualFirstName> <fc2:RawIndividualMiddleName>Adams</fc2:RawIndividualMiddleName> <fc2:RawIndividualNameSuffixText>Junior</fc2:RawIndividualNameSuffixText> </fc2:PartyName> Exempt Party (alternate name, if known): <fc2:PartyName SeqNum="37"> <fc2:PartyNameTypeCode>DBA</fc2:PartyNameTypeCode> <fc2:RawPartyFullName>JBI</fc2:RawPartyFullName> </fc2:PartyName> NOTE: If alternative name is unknown, then do not record the above PartyName element and associated sub-elements. Exempt Filer Bank: <fc2:PartyName SeqNum="47"> <fc2:RawPartyFullName>Bank of the West</fc2:RawPartyFullName> </fc2:PartyName> Exempt Affiliated Bank (when an affiliated bank is recorded): <fc2:PartyName SeqNum="59"> <fc2:RawPartyFullName>Bank of Western Ridge</fc2:RawPartyFullName> </fc2:PartyName> Authorized Official (if known): <fc2:PartyName SeqNum="115"> <fc2:RawIndividualTitleText>BSA Officer</fc2:RawIndividualTitleText> <fc2:RawPartyFullName>Jessica Wood</fc2:RawPartyFullName> </fc2:PartyName> NOTE: Only record the PartyName sub-elements that are known. If both sub-elements are unknown, do not record the above PartyName element and associated sub-elements.				

Element Name:	PartyNameTypeCode	minOccurs:	0	maxOccurs:	1
Description:	Party name type (code). This element identifies the type of name recorded for the party; specifically, legal name or alternate (DBA) name. This element corresponds with the following item(s): • Legal name (Transmitter) • Legal name (Transmitter Contact) • 3-5. Legal name • 7. Alternate name				
Attribute(s)	n/a				
Parent Element:	PartyName				
Element Restriction(s):	This element must be recorded for the party types below; otherwise, do not record this element. • Transmitter • Transmitter Contact				

Element Name:	PartyNameTypeCode	minOccurs:	0	maxOccurs:	1
	• Exempt Party				
Value Restriction(s):	The value provided must conform to the following requirements: Identify the party name type by recording the appropriate code from the list below: Code: L — Legal Code: DBA — Doing Business As* *DBA name type may only be used for the following party type when recording an alternate name: • Exempt Party				
Remarks:	The batch submission will be rejected if any of the following conditions are true: • The element is not recorded and the associated party type is: Transmitter, Transmitter contact, or Exempt Party. • The element is recorded for an inappropriate party type (see Element Restrictions for more information). • The element is recorded but with no value (i.e. the value is null). • The element contains an invalid value. • The element is recorded with a value that is not approved for the associated party type (see Value Restrictions for more information).				
Example:	If recording legal name for the Transmitter, Transmitter Contact, or Exempt Party: <fc2:PartyNameTypeCode>L</fc2:PartyNameTypeCode> If recording the alternative name for the Exempt Party: <fc2:PartyNameTypeCode>DBA</fc2:PartyNameTypeCode>				

Element Name:	RawEntityIndividualLastName	minOccurs:	0	maxOccurs:	1
Description:	Entity name or Individual last name (text). This element identifies the legal name of the exempt person, whether it be the legal name of the entity or the last name of the individual. This element corresponds with the following item: • 3. Individual's last name or entity's legal name of the exempt person *Please refer to Attachment C General Instruction 7 "Name Editing Instructions" and the Item 3 instructions for additional information regarding Item 3.*				
Attribute(s)	n/a				
Parent Element:	PartyName				
Element Restriction(s):	Record this element when the party type is associated with Exempt Party; otherwise, do not record this element.				
Value Restriction(s):	The value provided must conform to the following requirements: 150 characters or less				
Remarks:	The batch submission will be rejected if any of the following conditions are true: • The element is recorded for an inappropriate party type (see Element Restrictions for more information). The batch submission will be accepted with warning if any of the following conditions are true: • The element is not recorded for the Exempt Party. • The element is recorded but with no value (i.e. the value is null) for the Exempt Party.				
Example:	<fc2:RawEntityIndividualLastName>Johnson</fc2:RawEntityIndividualLastName>				

Element Name:	RawIndividualFirstName	minOccurs:	0	maxOccurs:	1
Description:	Individual first name (text). This element identifies the first name of the exempt person when the person is an individual. This element corresponds with the following item: • 4. First name				

Element Name:	RawIndividualFirstName	minOccurs:	0	maxOccurs:	1
	Please refer to Attachment C General Instruction 7 "Name Editing Instructions" and the Item 4 instructions for additional information regarding Item 4.				
Attribute(s)	n/a				
Parent Element:	PartyName				
Element Restriction(s):	Record this element when the party type is associated with Exempt Party and the party is an individual; otherwise, do not record this element.				
Value Restriction(s):	The value provided must conform to the following requirements: 35 characters or less				
Remarks:	The batch submission will be rejected if any of the following conditions are true: • The element is recorded for an inappropriate party type (see Element Restrictions for more information). The batch submission will be accepted with warning if any of the following conditions are true: • The element is not recorded for the Exempt Party and the PartyAsEntityOrganizationIndicator element does not contain a "Y" value. • The element is recorded but with no value (i.e. the value is null) for the Exempt Party and the PartyAsEntityOrganizationIndicator element does not contain a "Y" value. • The element is recorded for the Exempt Party and the PartyAsEntityOrganizationIndicator element contains a "Y" value.				
Example:	<fc2:RawIndividualFirstName>Mark</fc2:RawIndividualFirstName>				

Element Name:	RawIndividualMiddleName	minOccurs:	0	maxOccurs:	1
Description:	Individual middle name (text). This element identifies the middle name of the exempt person when the person is an individual and the middle name is known. This element corresponds with the following item: • 5. Middle name *Please refer to Attachment C General Instruction 7 "Name Editing Instructions" and the Item 5 instructions for additional information regarding Item 5.*				
Attribute(s)	n/a				
Parent Element:	PartyName				
Element Restriction(s):	Record this element when the party type is associated with Exempt Party, the party is an individual, and the middle name of the individual is known; otherwise, do not record this element.				
Value Restriction(s):	The value provided must conform to the following requirements: 35 characters or less				
Remarks:	The batch submission will be rejected if any of the following conditions are true: • The element is recorded for an inappropriate party type (see Element Restrictions for more information). The batch submission will be accepted with warning if any of the following conditions are true: • The exempt person is an entity and middle name is provided.				
Example:	<fc2:RawIndividualMiddleName>Adams</fc2:RawIndividualMiddleName>				

Element Name:	RawIndividualNameSuffixText	minOccurs:	0	maxOccurs:	1
Description:	Individual suffix name (text). This element identifies the suffix name of the exempt person when the person is an individual and the suffix name is known. This element corresponds with the following item: • 5. Suffix *Please refer to Attachment C General Instruction 7 "Name Editing Instructions" and the Item 5 instructions for additional information regarding Item 5.*				
Attribute(s)	n/a				
Parent Element:	PartyName				
Element Restriction(s):	Record this element when the party type is associated with Exempt Party, the party is an individual, and the suffix name of the individual is known; otherwise, do not record this element.				

Element Name:	RawIndividualNameSuffixText	minOccurs:	0	maxOccurs:	1
Value Restriction(s):	The value provided must conform to the following requirements: 35 characters or less				
Remarks:	The batch submission will be rejected if any of the following conditions are true: • The element is recorded for an inappropriate party type (see Element Restrictions for more information). The batch submission will be accepted with warning if any of the following conditions are true: • The exempt person is an entity and suffix name is provided.				
Example:	<fc2:RawIndividualNameSuffixText>Junior</fc2:RawIndividualNameSuffixText>				

Element Name:	RawIndividualTitleText	minOccurs:	0	maxOccurs:	1
Description:	Title (text). This element identifies the title of the official authorized to review and approve the contents of the FinCEN DOEP. This element corresponds with the following item: • 27. Title				
Attribute(s)	n/a				
Parent Element:	PartyName				
Element Restriction(s):	Record this element when the party type is associated with the Authorized Official and the title of the authorized official is known; otherwise, do not record this element.				
Value Restriction(s):	The value provided must conform to the following requirements: 35 characters or less				
Remarks:	The batch submission will be rejected if any of the following conditions are true: • The element is recorded for an inappropriate party type (see Element Restrictions for more information).				
Example:	<fc2:RawIndividualTitleText>BSA Officer</fc2:RawIndividualTitleText>				

Element Name:	RawPartyFullName	minOccurs:	0	maxOccurs:	1
Description:	Party full name (text). This element identifies the full name of the party, whether it be the legal name of an institution or the alternate (DBA) name of the exempt person. This element corresponds with the following item(s): • Legal name (Transmitter) • Legal name (Transmitter Contact) • 7. Alternate name • 17. Name of bank (Exempt Filer Bank) • 17. Name of bank (Exempt Affiliated Bank) • 26. Print name *Please refer to Attachment C General Instruction 7 "Name Editing Instructions" and item instructions for additional information regarding the above items.*				
Attribute(s)	n/a				
Parent Element:	PartyName				
Element Restriction(s):	Record this element for the following party types/conditions; otherwise, do not record this element. • Transmitter • Transmitter Contact • Exempt Party (when the alternate name is known) • Exempt Filer Bank • Exempt Affiliated Bank (when an affiliated bank party type is recorded) • Authorized Official (when the name of the official is known)				
Value Restriction(s):	The value provided must conform to the following requirements: 150 characters or less				
Remarks:	The batch submission will be rejected if any of the following conditions are true: • The element is recorded for an inappropriate party type (see Element Restrictions for more information).				

Element Name:	RawPartyFullName	minOccurs:	0	maxOccurs:	1

	The batch submission will be accepted with warning if any of the following conditions are true:
	• The element is not recorded or does not contain a value for the following party types/conditions:
	  ○ Transmitter
	  ○ Transmitter Contact
	  ○ Exempt Filer Bank
	  ○ Exempt Affiliated Bank (when an affiliated bank party type is recorded)				

Example:	<fc2:RawPartyFullName>Bank of the West</fc2:RawPartyFullName>				

4.5.2. Address Elements

Element Name:	Address	minOccurs:	0	maxOccurs:	1
Description:	Address (header). This is the container for information about the address of the party. *Please refer to Attachment C for additional information regarding the above item(s).* The following sub-element is associated with this element: **Activity party type code definitions** 35 = Transmitter | 11 = Exempt Party | 45 = Exempt Filer Bank | 12 = Exempt Affiliated Bank				

1. Transmitter: Address (Required | 1 occurrence)

Name	minOccurs	maxOccurs	Content
RawCityText	1	1	Simple
RawCountryCodeText	1	1	Simple
RawStateCodeText	1	1	Simple
RawStreetAddress1Text	1	1	Simple
RawZIPCode	1	1	Simple

2. Exempt Party: Address (Required | Part II, Items 8-11 | 1 occurrence)

Name	minOccurs	maxOccurs	Content
RawCityText (Item 9)	1	1	Simple
RawStateCodeText (Item 10)	1	1	Simple
RawStreetAddress1Text (Item 8)	1	1	Simple
RawZIPCode (Item 11)	1	1	Simple

3. Exempt Filer Bank: Address (Required | Part III, Items 20-23)

Name	minOccurs	maxOccurs	Content
RawCityText (Item 21)	1	1	Simple
RawStateCodeText (Item 22)	1	1	Simple
RawStreetAddress1Text (Item 20)	1	1	Simple
RawZIPCode (Item 23)	1	1	Simple

1. Exempt Affiliated Bank: Address (Required if affiliated bank is recorded | Part III, Items 20-23)

Name	minOccurs	maxOccurs	Content
RawCityText (Item 21)	1	1	Simple
RawStateCodeText (Item 22)	1	1	Simple

Element Name:	Address	minOccurs:	0	maxOccurs:	1

RawStreetAddress1Text (Item 20)	1	1	Simple
RawZIPCode (Item 23)	1	1	Simple

Attribute(s)

The following attributes must be recorded for this element:

Name	Description
SeqNum	The value recorded for this attribute must be numeric and unique. It may contain any numeric value up to 19 characters in length.

Parent Element: Party

Element Restriction(s):

Required. This element must be recorded for the following party types (activity level):

Party type	Address (min-max)
Transmitter	1-1
Exempt Party	1-1
Exempt Filer Bank	1-1
Exempt Affiliated Bank (if recorded)	1-1

Value Restriction(s): n/a

Remarks:

The batch submission will be rejected if any of the following conditions are true:

- The element is recorded for an inappropriate party type (see Element Restrictions for more information).
- The element is recorded for a valid party type, but all sub-elements are missing.
- The element is missing a "SeqNum" attribute.
- The element contains a "SeqNum" attribute with a duplicate or invalid value.

The batch submission will be accepted with warning if any of the following conditions are true:

- The element is not recorded for one or more of the following party types:
  - Transmitter
  - Exempt Party
  - Exempt Filer Bank
  - Exempt Affiliated Bank (when an affiliated bank party type is recorded)

Example:

Transmitter:

```
<fc2:Address SeqNum="19">
        <fc2:RawCityText>Vienna</fc2:RawCityText>
        <fc2:RawCountryCodeText>US</fc2:RawCountryCodeText>
        <fc2:RawStateCodeText>FL</fc2:RawStateCodeText>
        <fc2:RawStreetAddress1Text>123 Rocking Horse Road</fc2:RawStreetAddress1Text>
        <fc2:RawZIPCode>32159</fc2:RawZIPCode>
</fc2:Address>
```

Exempt Party (if US State):

```
<fc2:Address SeqNum="26">
        <fc2:RawCityText>Flower Valley</fc2:RawCityText>
        <fc2:RawStateCodeText>MD</fc2:RawStateCodeText>
        <fc2:RawStreetAddress1Text>547 Kind Way</fc2:RawStreetAddress1Text>
        <fc2:RawZIPCode>66589</fc2:RawZIPCode>
</fc2:Address>
```

Exempt Party (if US Territory):

```
<fc2:Address SeqNum="26">
```

Element Name:	Address	minOccurs:	0	maxOccurs:	1
	<fc2:RawCityText>Flower Hills</fc2:RawCityText> <fc2:RawStateCodeText>GU</fc2:RawStateCodeText> <fc2:RawStreetAddress1Text>333 Rolling Road</fc2:RawStreetAddress1Text> <fc2:RawZIPCode>22548</fc2:RawZIPCode> </fc2:Address> Exempt Filer Bank: <fc2:Address SeqNum="49"> <fc2:RawCityText>San Juan</fc2:RawCityText> <fc2:RawStateCodeText>PR</fc2:RawStateCodeText> <fc2:RawStreetAddress1Text>605 Av. Miramar</fc2:RawStreetAddress1Text> <fc2:RawZIPCode>00907</fc2:RawZIPCode> </fc2:Address> Exempt Affiliated Bank: <fc2:Address SeqNum="70"> <fc2:RawCityText>Dallas</fc2:RawCityText> <fc2:RawStateCodeText>TX</fc2:RawStateCodeText> <fc2:RawStreetAddress1Text>9121 Bruton Road</fc2:RawStreetAddress1Text> <fc2:RawZIPCode>75217</fc2:RawZIPCode> </fc2:Address>				

Element Name:	RawCityText	minOccurs:	1	maxOccurs:	1
Description:	City (text). This element identifies the city associated with the address of the party. This element corresponds with the following items: • City (Transmitter) • 9. City • 21. City (Exempt Filer Bank) • 21. City (Exempt Affiliated Bank) *Please refer to Attachment C General Instruction 5 "Addresses" and item instructions for additional information regarding the above items.*				
Attribute(s)	n/a				
Parent Element:	Address				
Element Restriction(s):	Record this element when the parent element is recorded.				
Value Restriction(s):	The value provided must conform to the following requirements: 50 characters or less.				

Remarks:	The batch submission will be <u>rejected</u> if any of the following conditions are true:
	• The element is not recorded and the parent element is recorded.
	The batch submission will be <u>accepted with warning</u> if any of the following conditions are true:
	• The element is recorded but with no value (i.e. the value is null) for one or more of the following party types:
	  ○ Transmitter
	  ○ Exempt Party
	  ○ Exempt Filer Bank
	  ○ Exempt Affiliated Bank (when an affiliated bank party type is recorded)				

Example:	<fc2:RawCityText>Orlando</fc2:RawCityText>				

Element Name:	RawCountryCodeText	minOccurs:	0	maxOccurs:	1
Description:	Country (code). This element identifies the country associated with the Transmitter.				
Attribute(s)	n/a				
Parent Element:	Address				

Element Name:	RawCountryCodeText	minOccurs:	0	maxOccurs:	1
Element Restriction(s):	Record this element for the Transmitter party type; otherwise, do not record this element.				
Value Restriction(s):	The value provided must conform to the following requirements: Valid 2-character ISO-3166-2 country code.				
Remarks:	The batch submission will be rejected if any of the following conditions are true: • The element is recorded for a party type not equal to Transmitter. The batch submission will be accepted with warning if any of the following conditions are true: • The value recorded is not a valid country code. • The element is not recorded or does not contain a value for the Transmitter. • State code and country code mismatch for the Transmitter.				
Example:	If the Transmitter is located in a foreign location (e.g. Canada): <fc2:RawCountryCodeText>CA</fc2:RawCountryCodeText> If Transmitter is located in a US State: <fc2:RawCountryCodeText>US</fc2:RawCountryCodeText> If Transmitter is located in a US Territory (e.g. Puerto Rico): <fc2:RawCountryCodeText>PR</fc2:RawCountryCodeText>				

Element Name:	RawStateCodeText	minOccurs:	1	maxOccurs:	1
Description:	State/Territory/Province (code). This element identifies the state/territory/province associated with the address of the party. This element corresponds with the following items: • State (Transmitter, foreign state/territory/province accepted) • 10. U.S. State/Territory • 22. U.S. State/Territory (Exempt Filer Bank) • 22. U.S. State/Territory (Exempt Affiliated Bank) *Please refer to Attachment C General Instruction 5 "Addresses" and item instructions for additional information regarding the above items.*				
Attribute(s)	n/a				
Parent Element:	Address				
Element Restriction(s):	Record this element when the parent element is recorded.				

Value Restriction(s):	The value provided must conform to the following requirements:
	• When recording a U.S. State/Territory, enter the appropriate two-letter code used by the United States Postal Service.
	• If the party is associated with the Transmitter and:
	  ○ A U.S. territory is being recorded, the entry must be recorded for both state and country.
	  ○ A Canadian province/territory is being recorded, the entry must adhere to the standards of ISO 3166-2:CA.
	  ○ A Mexican state/federal district is being recorded, the entry must adhere to the standards of ISO 3166-2:MX.				

Remarks:	The batch submission will be accepted with warning if any of the following conditions are true: • The value recorded is not a valid code. • The element is not recorded or does not contain a value for the Exempt Party, Exempt Filer Bank, or the Exempt Affiliated Bank. • The element is not recorded or does not contain a value for the Transmitter and the country is US, CA, MX, or a U.S. Territory. • The element contains a value for the Transmitter and the country is not US, CA, MX, or a U.S. Territory. • State code and country code mismatch when U.S. Territory is recorded for the Transmitter.				
Example:	Transmitter can be either a U.S. State/Territory, or a foreign state/territory/province when the corresponding country is Canada or Mexico (e.g. Coahuila, Mexico): <fc2:RawStateCodeText>COA</fc2:RawStateCodeText>				

Element Name:	RawStateCodeText	minOccurs:	1	maxOccurs:	1
	Exempt Party, Exempt Filer Bank, and Exempt Affiliated Bank must be a U.S. State/Territory (e.g. Guam): <fc2:RawStateCodeText>GU</fc2:RawStateCodeText>				

Element Name:	RawStreetAddress1Text	minOccurs:	1	maxOccurs:	1
Description:	Street address (text). This element identifies the street address of the party. This element corresponds with the following items: • Street Address (Transmitter) • 8. Street Address • 20. Street Address (Exempt Filer Bank) • 20. Street Address (Exempt Affiliated Bank) *Please refer to Attachment C General Instruction 5 "Addresses" and item instructions for additional information regarding the above items.*				
Attribute(s)	n/a				
Parent Element:	Address				
Element Restriction(s):	Record this element when the parent element is recorded.				
Value Restriction(s):	The value provided must conform to the following requirements: 100 characters or less				

Remarks:	The batch submission will be rejected if any of the following conditions are true:
	• The element is not recorded and the parent element is recorded.
	The batch submission will be accepted with warning if any of the following conditions are true:
	• The element is recorded but with no value (i.e. the value is null) for one or more of the following party types:
	  ○ Transmitter
	  ○ Exempt Party
	  ○ Exempt Filer Bank
	  ○ Exempt Affiliated Bank (when an affiliated bank party type is recorded)				

Example:	<fc2:RawStreetAddress1Text>9121 Bruton Road</fc2:RawStreetAddress1Text>				

Element Name:	RawZIPCode	minOccurs:	1	maxOccurs:	1
Description:	ZIP/Postal Code (text). This element identifies the ZIP Code (or foreign postal code of the Transmitter) associated with the address of the party. This element corresponds with the following items: • ZIP/Foreign Postal Code (Transmitter) • 11. ZIP Code • 23. ZIP Code (Exempt Filer Bank) • 23. ZIP Code (Exempt Affiliated Bank) *Please refer to Attachment C General Instruction 5 "Addresses" and item instructions for additional information regarding the above items.*				
Attribute(s)	n/a				
Parent Element:	Address				
Element Restriction(s):	Record this element when the parent element is recorded.				
Value Restriction(s):	The value provided must conform to the following requirements: • For a U.S. address (including U.S. Territories): 5 or 9 numeric character entry; 9 numeric character entry cannot end with four zeros or four nines. • For a non-U.S. address (Transmitter party type only): 9 (or less) alphanumeric character entry. • Do not include punctuation or formatting such as hyphens, periods, and spaces within the value entry.				
Remarks:	The batch submission will be rejected if any of the following conditions are true: • The element is not recorded and the parent element is recorded. The batch submission will be accepted with warning if any of the following conditions are true: • The element is recorded but with no value (i.e. the value is null).				

Element Name:	RawZIPCode	minOccurs:	1	maxOccurs:	1
	• The value recorded is not equal to 5 or 9 numeric characters or is a 9-digit value ending in four zeros/nines, and the corresponding country is equal to US or a U.S. Territory code.				
Example:	ZIP Code (US or US Territory, 5 digit): <fc2:RawZIPCode>75217</fc2:RawZIPCode> ZIP Code (US or US Territory, 9 digit): <fc2:RawZIPCode>752174459</fc2:RawZIPCode> Foreign Postal Code (Transmitter address only): <fc2:RawZIPCode>DD5412</fc2:RawZIPCode>				

4.5.3. PhoneNumber Elements

Element Name:	PhoneNumber	minOccurs:	0	maxOccurs:	1
Description:	Telephone number (header). This is the container for information about the telephone number of the party. The following sub-element is associated with this element: **Activity party type code definitions** 35 = Transmitter | 3 = Authorized Official | 11 = Exempt Party 1. Transmitter: Telephone (Required) Name | minOccurs | maxOccurs | Content PhoneNumberText | 1 | 1 | Simple 2. Exempt Party: Telephone (Required if known | Part II, Item 15/15a) Name | minOccurs | maxOccurs | Content PhoneNumberExtensionText (Item 15a) | 0 | 1 | Simple PhoneNumberText (Item 15) | 1 | 1 | Simple 3. Authorized Official: Telephone (Required if known | Part IV, Item 29/29a) Name | minOccurs | maxOccurs | Content PhoneNumberExtensionText (Item 29a) | 0 | 1 | Simple PhoneNumberText (Item 29) | 1 | 1 | Simple				
Attribute(s)	The following attributes must be recorded for this element: Name | Description SeqNum | The value recorded for this attribute must be numeric and unique. It may contain any numeric value up to 19 characters in length.				
Parent Element:	Party				
Element Restriction(s):	Required. This element must be recorded for the following party types (activity level): Party type | Telephone (min-max) Transmitter | 1-1 Exempt Party | 0-1				

Element Name:	PhoneNumber	minOccurs:	0	maxOccurs:	1
	Authorized Official 0-1				
Value Restriction(s):	n/a				
Remarks:	The batch submission will be rejected if any of the following conditions are true: • The element is recorded for an inappropriate party type (see Element Restrictions for more information). • The element is recorded for a valid party type, but all sub-elements are missing. • The element is missing a "SeqNum" attribute. • The element contains a "SeqNum" attribute with a duplicate or invalid value.				
Example:	Transmitter: <fc2:PhoneNumber SeqNum="20"> <fc2:PhoneNumberText>9854125698</fc2:PhoneNumberText> </fc2:PhoneNumber> Exempt Party*: <fc2:PhoneNumber SeqNum="27"> <fc2:PhoneNumberExtensionText>5547</fc2:PhoneNumberExtensionText> <fc2:PhoneNumberText>9985654123</fc2:PhoneNumberText> </fc2:PhoneNumber> Authorized Official*: <fc2:PhoneNumber SeqNum="98"> <fc2:PhoneNumberExtensionText>651</fc2:PhoneNumberExtensionText> <fc2:PhoneNumberText>6655447815</fc2:PhoneNumberText> </fc2:PhoneNumber> *When the phone number is known, record the PhoneNumber element along with the PhoneNumberText sub-element. If the extension is also known, record as well; however, extension should not be recorded unless phone number is known. If both sub-elements are unknown, do not record the above PhoneNumber element and associated sub-elements.				

Element Name:	PhoneNumberExtensionText	minOccurs:	0	maxOccurs:	1
Description:	Telephone extension (text). This element identifies the telephone extension associated with the telephone number of the party (if known). This element corresponds with the following items: • 15a. Extension • 29a. Extension *Please refer to Attachment C General Instruction 4 "Numbers" and item instructions for additional information regarding the above items.*				
Attribute(s)	n/a				
Parent Element:	PhoneNumber				
Element Restriction(s):	Record this element for the following party types and circumstances; otherwise, do not record this element: • Exempt Party and telephone number and extension are known • Authorized Official and telephone number and extension are known				
Value Restriction(s):	The value provided must adhere to the following requirements: 6 numeric characters or less				
Remarks:	The batch submission will be rejected if any of the following conditions are true: • The element is recorded for the Transmitter party type.				
Example:	<fc2:PhoneNumberExtensionText>5584</fc2:PhoneNumberExtensionText>				

Element Name:	PhoneNumberText	minOccurs:	1	maxOccurs:	1
Description:	Telephone number (text). This element identifies the telephone number of the party. This element corresponds with the following items: • Phone number (Transmitter) • 15. Phone number • 29. Phone number *Please refer to Attachment C General Instruction 4 "Numbers" and item instructions for additional information regarding the above items.*				
Attribute(s)	n/a				
Parent Element:	PhoneNumber				
Element Restriction(s):	Record this element for the following party types and circumstances; otherwise, do not record this element: • Transmitter • Exempt Party and the telephone number is known • Authorized Official and telephone number is known				

Value Restriction(s):	The value provided must conform to the following requirements:
	• Transmitter:
	  ○ 1-16 numeric characters; not all same digit (such as all 0's or all 9's).
	  ○ Phone number must be the same for all FinCEN DOEP's in the batch file.
	• Exempt Party & Authorized Official:
	  ○ 10 numeric characters; not all same digit (such as all 0's or all 9's).
	• Do not include punctuation or formatting such as hyphens, periods, and spaces within the value entry regardless of party type.				

Remarks:	The batch submission will be rejected if any of the following conditions are true: • The element is not recorded and the parent element is recorded. The batch submission will be accepted with warning if any of the following conditions are true: • The element is recorded but does not contain a value (i.e. the value is null) for the Transmitter. • The value recorded does not equal 10 numeric characters and the party type is associated with the Exempt Party or the Authorized Official.				
Example:	<fc2:PhoneNumberText>6655447815</fc2:PhoneNumberText>				

4.5.4. PartyIdentification Elements

Element Name:	PartyIdentification	minOccurs:	0	maxOccurs:	2
Description:	Party identification (header). This is the container for information about the identification associated with the party. The following sub-element is associated with this element: **Activity party type code definitions** 35 = Transmitter | 11 = Exempt Party 45 = Exempt Filer Bank | 12 = Exempt Affiliated Bank 1. Transmitter a. Transmitter Control Code (TCC) (Required)				

Name	minOccurs	maxOccurs	Content
PartyIdentificationNumberText	1	1	Simple
PartyIdentificationTypeCode (Code 28)	1	1	Simple

b. Taxpayer Identification Number (EIN) (Required)

Name	minOccurs	maxOccurs	Content
PartyIdentificationNumberText	1	1	Simple

Element Name:	PartyIdentification	minOccurs:	0	maxOccurs:	2

PartyIdentificationTypeCode (Code 2)	1	1	Simple

2. Exempt Party
   a. TIN (SSN/ITIN or EIN) (Required | Part II, Items 12-13)

Name	minOccurs	maxOccurs	Content
PartyIdentificationNumberText (Item 12)	1	1	Simple
PartyIdentificationTypeCode (Item 13)	1	1	Simple

3. Exempt Filer Bank
   a. EIN (Required | Part III, Item 18)

Name	minOccurs	maxOccurs	Content
PartyIdentificationNumberText (Item 18)	1	1	Simple
PartyIdentificationTypeCode (Code 2)	1	1	Simple

   b. RSSD (Required if known | Part III, Item 19)

Name	minOccurs	maxOccurs	Content
PartyIdentificationNumberText (Item 19)	1	1	Simple
PartyIdentificationTypeCode (Item 14)	1	1	Simple

4. Exempt Affiliated Bank
   a. EIN (Required if affiliated bank is recorded | Part III, Item 18)

Name	minOccurs	maxOccurs	Content
PartyIdentificationNumberText (Item 18)	1	1	Simple
PartyIdentificationTypeCode (Code 2)	1	1	Simple

   b. RSSD (Required if known | Part III, Item 19)

Name	minOccurs	maxOccurs	Content
PartyIdentificationNumberText (Item 19)	1	1	Simple
PartyIdentificationTypeCode (Item 14)	1	1	Simple

Attribute(s)

The following attributes must be recorded for this element:

Name	Description
SeqNum	The value recorded for this attribute must be numeric and unique. It may contain any numeric value up to 19 characters in length.

Parent Element: Party

Element Restriction(s): Required. This element must be recorded for the following party types:

Party type	TCC *(min-max)*	TIN *(min-max)*	RSSD *(min-max)*
Transmitter	1-1	1-1	n/a
Exempt Party	n/a	1-1	n/a
Exempt Filer Bank	n/a	1-1	0-1
Exempt Affiliated Bank (if recorded)	n/a	1-1	0-1

Element Name:	PartyIdentification	minOccurs:	0	maxOccurs:	2
Value Restriction(s):	n/a				

Remarks:	The batch submission will be rejected if any of the following conditions are true:
	• The element is recorded for an inappropriate party type (see Element Restrictions for more information).
	• The element is recorded for a valid party type, but all sub-elements are missing.
	• The element is missing a "SeqNum" attribute.
	• The element contains a "SeqNum" attribute with a duplicate or invalid value.
	• The Transmitter TCC is not provided or is invalid.
	The batch submission will be accepted with warning if any of the following conditions are true:
	• The element is not recorded or the value is null for the:
	  ○ Transmitter EIN
	  ○ Exempt Party TIN
	  ○ Exempt Filer EIN
	  ○ Exempt Affiliated Bank EIN (when an affiliated bank party type is recorded)				

Example:	Transmitter EIN and TCC: <fc2:PartyIdentification SeqNum="21">[machine_data_start] <fc2:PartyIdentificationNumberText>554489521</fc2:PartyIdentificationNumberText> <fc2:PartyIdentificationTypeCode>2</fc2:PartyIdentificationTypeCode> </fc2:PartyIdentification>[machine_data_end] <fc2:PartyIdentification SeqNum="22">[machine_data_start] <fc2:PartyIdentificationNumberText>PBSA8180</fc2:PartyIdentificationNumberText> <fc2:PartyIdentificationTypeCode>28</fc2:PartyIdentificationTypeCode> </fc2:PartyIdentification>[machine_data_end] NOTE: When testing on the User Test system, the TCC value for the PartyIdentificationNumberText element should be TBSATEST. Exempt Party TIN (EIN or SSN/ITIN): <fc2:PartyIdentification SeqNum="28">[machine_data_start] <fc2:PartyIdentificationNumberText>212121211</fc2:PartyIdentificationNumberText> <fc2:PartyIdentificationTypeCode>2</fc2:PartyIdentificationTypeCode> </fc2:PartyIdentification>[machine_data_end] Exempt Filer Bank (EIN and RSSD*): <fc2:PartyIdentification SeqNum="33">[machine_data_start] <fc2:PartyIdentificationNumberText>318181818</fc2:PartyIdentificationNumberText> <fc2:PartyIdentificationTypeCode>2</fc2:PartyIdentificationTypeCode> </fc2:PartyIdentification>[machine_data_end] <fc2:PartyIdentification SeqNum="34">[machine_data_start] <fc2:PartyIdentificationNumberText>114565879</fc2:PartyIdentificationNumberText> <fc2:PartyIdentificationTypeCode>14</fc2:PartyIdentificationTypeCode> </fc2:PartyIdentification>[machine_data_end] Exempt Affiliated Bank (EIN and RSSD*): <fc2:PartyIdentification SeqNum="46">[machine_data_start] <fc2:PartyIdentificationNumberText>556441258</fc2:PartyIdentificationNumberText> <fc2:PartyIdentificationTypeCode>2</fc2:PartyIdentificationTypeCode> </fc2:PartyIdentification>[machine_data_end] <fc2:PartyIdentification SeqNum="47">[machine_data_start] <fc2:PartyIdentificationNumberText>669855236</fc2:PartyIdentificationNumberText> <fc2:PartyIdentificationTypeCode>14</fc2:PartyIdentificationTypeCode> </fc2:PartyIdentification>[machine_data_end] *If the RSSD is not known for the Exempt Filer Bank or Exempt Affiliated Bank, do not record the PartyIdentification element and associated sub-elements for the RSSD.				

Element Name:	PartyIdentificationNumberText	minOccurs:	1	maxOccurs:	1
Description:	Identification number (text). This element identifies the number associated with the identification. This element corresponds with the following items: • Transmitter Control Code (TCC) number (Transmitter) • Employer Identification Number (EIN) number (Transmitter) • 12. TIN (SSN/ITIN or EIN) number • 18. EIN number (Exempt Filer Bank) • 18. EIN number (Exempt Affiliated Bank) • 19. RSSD number (Exempt Filer Bank) • 19. RSSD number (Exempt Affiliated Bank) *Please refer to Attachment C General Instruction 4 "Numbers" and item instructions for additional information regarding the above items.*				
Attribute(s)	n/a				
Parent Element:	PartyIdentification				
Element Restriction(s):	Record this element when the parent element is recorded.				

Value Restriction(s):	The value provided must adhere to the following requirements by party type:
	• Transmitter
	  ○ TCC = 8 characters equal to "TBSATEST" (when submitting in the BSA E-Filing User Test System) or "PBSA8180" (when submitting in the BSA E-Filing Production System)
	  ○ EIN = 9 numeric characters
	• Exempt Party, Exempt Filer Bank, and Exempt Affiliated Bank:
	  ○ TIN = 9 numeric characters
	• Exempt Filer Bank and Exempt Affiliated Bank:
	  ○ RSSD = 20 characters or less
	All identification numbers must be entered as a single alpha/numeric text string without formatting or special characters such as, for example, spaces, hyphens, or periods. Cannot be consecutive string of the same number or an incremental string such as 123456789.				

Remarks:	The batch submission will be rejected if any of the following conditions are true: • The element is not recorded and parent element is recorded. • The value recorded for the Transmitter TCC is not valid. The batch submission will be accepted with warning if any of the following conditions are true: • The element is recorded but does not contain a value (i.e. the value is null) • The value recorded for the EIN and/or SSN/ITIN is an invalid number string.				
Example:	<fc2:PartyIdentificationNumberText>660623559</fc2:PartyIdentificationNumberText>				

Element Name:	PartyIdentificationTypeCode	minOccurs:	1	maxOccurs:	1
Description:	Identification type (code). This element identifies the type of identification number recorded for the party. This element corresponds with the following items: • Transmitter Control Code (TCC) number type (Transmitter) • Taxpayer Identification Number (EIN) number type (Transmitter) • 13. TIN number type (SSN/ITIN or EIN) • 18. EIN number type (Exempt Filer Bank) • 18. EIN number type (Exempt Affiliated Bank) • 19. RSSD number type (Exempt Filer Bank) • 19. RSSD number type (Exempt Affiliated Bank)				
Attribute(s)	n/a				
Parent Element:	PartyIdentification				
Element Restriction(s):	Required. This element must be recorded when the parent element is recorded.				

Element Name:	PartyIdentificationTypeCode	minOccurs:	1	maxOccurs:	1
Value Restriction(s):	The value provided must conform to the following requirements: Identify the identification type by recording the appropriate code from the list below (by party type):				

Activity party type code definitions
35 = Transmitter | 11 = Exempt Party
45 = Exempt Filer Bank | 12 = Exempt Affiliated Bank

Code	Description	Party Type (Code)			
		35	11	45	12
28	Transmitter Control Code (TCC)	●			
2	Employer Identification Number (EIN)	●	●	●	●
1	Social Security Number (SSN) / Individual Taxpayer Identification Number (ITIN)		●		
14	Research, Statistics, Supervision, and Discount (RSSD) Number			●	●

Remarks:	The batch submission will be rejected if any of the following conditions are true: • The element is not recorded. • The element contains a value not equal to one of the approved codes listed above. • The element is recorded but without a value (i.e. the value is null). • The element contains a value that is not valid for the associated party type. • The element contains a value that has already been recorded for the same party type.
Example:	<fc2:PartyIdentificationTypeCode>2</fc2:PartyIdentificationTypeCode>

4.5.5. PartyOccupationBusiness Elements

Element Name:	PartyOccupationBusiness	minOccurs:	0	maxOccurs:	1
Description:	Occupation or type of business (header). This is the container for information about the occupation or type of business of the Exempt party. The following sub-element is associated with this element:				

Activity party type code definitions
11 = Exempt Party

Exempt Party: Occupation and/or NAICS Code (if known | Part II, Item 7/7a)

Name	minOccurs	maxOccurs	Content
NAICSCode (Item 7a)	0	1	Simple
OccupationBusinessText (Item 7)	0	1	Simple

**If the <PartyOccupationBusiness> element is recorded for the Exempt Party, then at least one of the above elements should be recorded with a valid value.*

Attribute(s)	The following attributes must be recorded for this element:

Name	Description
SeqNum	The value recorded for this attribute must be numeric and unique. It may contain any numeric value up to 19 characters in length.

Parent Element:	Party
Element Restriction(s):	Record this element when the occupation and/or NAICS Code is known for the Exempt party; otherwise, do not record this element.
Value Restriction(s):	n/a
Remarks:	The batch submission will be rejected if any of the following conditions are true: • The element is recorded for an inappropriate party type (see Element Restrictions for more information).

Element Name:	PartyOccupationBusiness	minOccurs:	0	maxOccurs:	1
	• The element is recorded for a valid party type, but all sub-elements are missing or do not contain a value. • The element is missing a "SeqNum" attribute. • The element contains a "SeqNum" attribute with a duplicate or invalid value.				
Example:	<fc2:PartyOccupationBusiness SeqNum="29"> <fc2:NAICSCode>4248</fc2:NAICSCode> <fc2:OccupationBusinessText>Business Description</fc2:OccupationBusinessText> </fc2:PartyOccupationBusiness> NOTE: Only record the PartyOccupationBusiness sub-elements that are known. If both sub-elements are unknown, do not record the above PartyOccupationBusiness element and associated sub-elements.				

Element Name:	NAICSCode	minOccurs:	0	maxOccurs:	1
Description:	NAICS Code (text). This element identifies the North American Industry Classification System (NAICS) code for the occupation or type of business of the Exempt Party. This element corresponds with the following item: • 7a. NAICS Code *Please refer to Attachment C item instructions for additional information about this item.*				
Attribute(s)	n/a				
Parent Element:	PartyOccupationBusiness				
Element Restriction(s):	Record this element when the NAICS code associated with the Exempt Party is known; otherwise, do not record this element.				
Value Restriction(s):	The value provided must adhere to the following requirements: 3-6 digit numeric characters. Use the list of NAICS Codes authorized for use in the FinCEN DOEP located on the BSA E-Filing Web Site (http://bsaefiling.fincen.treas.gov) or from the U.S. Census Bureau NAICS list. Select a code that most-closely relates to the occupation or type of business recorded for the exempt person in the <OccupationBusinessText> element.				
Remarks:	n/a				
Example:	<fc2:NAICSCode>4248</fc2:NAICSCode>				

Element Name:	OccupationBusinessText	minOccurs:	0	maxOccurs:	1
Description:	Occupation or type of business (description). This element identifies the description of the occupation, profession, or type of business of the Exempt party. This element corresponds with the following item: • 7. Occupation or type of business *Please refer to Attachment C item instructions for additional information about this item.*				
Attribute(s)	n/a				
Parent Element:	PartyOccupationBusiness				
Element Restriction(s):	Record this element when the occupation or type of business associated with the Exempt Party is known; otherwise, do not record this element.				
Value Restriction(s):	The value provided must conform to the following requirements: 30 characters or less				
Remarks:	n/a				
Example:	<fc2:OccupationBusinessText>Business Description</fc2:OccupationBusinessText>				

4.5.6. ElectronicAddress Elements

Element Name:	ElectronicAddress	minOccurs:	0	maxOccurs:	1
Description:	Electronic address (header). This is the container for information about the e-mail address associated with the Exempt Party.				

Element Name:	ElectronicAddress	minOccurs:	0	maxOccurs:	1
	The following sub-element is associated with this element: **Activity party type code definitions** 11 = Exempt Party Exempt Party: E-mail address (Required if known | Part II, Item 14) Name | minOccurs | maxOccurs | Content ElectronicAddressText (Item 14) | 1 | 1 | Simple				
Attribute(s)	The following attributes must be recorded for this element: Name | Description SeqNum | The value recorded for this attribute must be numeric and unique. It may contain any numeric value up to 19 characters in length.				
Parent Element:	Party				
Element Restriction(s):	Record this element when the e-mail address associated with the Exempt Party is known; otherwise, do not record this element.				
Value Restriction(s):	n/a				
Remarks:	The batch submission will be rejected if any of the following conditions are true: • The element is recorded for an inappropriate party type (see Element Restrictions for more information). • The element is recorded for a valid party type, but all sub-elements are missing. • The element is missing a "SeqNum" attribute. • The element contains a "SeqNum" attribute with a duplicate or invalid value.				
Example:	<fc2:ElectronicAddress SeqNum="30"> <fc2:ElectronicAddressText>john.joe@email.com</fc2:ElectronicAddressText> </fc2:ElectronicAddress>				

Element Name:	ElectronicAddressText	minOccurs:	1	maxOccurs:	1
Description:	Electronic address (text). This element identifies the email address associated with the Exempt party. This element corresponds with the following item: • 14. E-mail address *Please refer to Attachment C item instructions for additional information about this item.*				
Attribute(s)	n/a				
Parent Element:	ElectronicAddress				
Element Restriction(s):	Record this element when the parent element is recorded.				
Value Restriction(s):	The value provided must adhere to the following requirements: 100 characters or less; the value must contain the "@" sign followed by at least one period (e.g. richardroephd@college.edu)				
Remarks:	The batch submission will be rejected if any of the following conditions are true: • The element is not recorded and the parent element is recorded. The batch submission will be accepted with warning if any of the following conditions are true: • The value recorded for the element is not a valid email address.				
Example:	<fc2:ElectronicAddressText>john.joe@email.com</fc2:ElectronicAddressText>				

4.6. DesignationExemptActivity Elements

Element Name:	DesignationExemptActivity	minOccurs:	1	maxOccurs:	1
Description:	This is the container for information about the type of exempt person and the effective date of the exemption associated with the FinCEN DOEP. The following sub-element is associated with this element: Name / minOccurs / maxOccurs / Category ExemptBasisTypeCode (Item 16) / 1 / 1 / Simple ExemptEffectiveBeginDateText (Item 2) / 1 / 1 / Simple				
Attribute(s)	The following attributes must be recorded for this element: Name: SeqNum Description: The value recorded for this attribute must be numeric and unique. It may contain any numeric value up to 19 characters in length.				
Parent Element:	Activity				
Element Restriction(s):	Required. This element must be recorded.				
Value Restriction(s):	n/a				
Remarks:	The batch submission will be rejected if any of the following conditions are true: • The element is not recorded. • The element is missing a "SeqNum" attribute. • The element contains a "SeqNum" attribute with a duplicate or invalid value.				
Example:	<fc2:DesignationExemptActivity SeqNum="17"> <fc2:ExemptBasisTypeCode>C</fc2:ExemptBasisTypeCode> <fc2:ExemptEffectiveBeginDateText>20190208</fc2:ExemptEffectiveBeginDateText> </fc2:DesignationExemptActivity>				

Element Name:	ExemptBasisTypeCode	minOccurs:	1	maxOccurs:	1
Description:	Exempt basis type (code). This element identifies the exempt person type. This element corresponds with the following item: • 16. Type of exempt person				
Attribute(s)	n/a				
Parent Element:	DesignationExemptActivity				
Element Restriction(s):	Required. This element must be recorded.				
Value Restriction(s):	The value provided must conform to the following requirements: Code / Description C / Listed company D / Listed company subsidiary E / Eligible non-listed business F / Payroll customer				
Remarks:	The batch submission will be rejected if any of the following conditions are true: • The element is not recorded. • The element is recorded but with no value (i.e. the value is null). • The element contains an invalid value.				
Example:	<fc2:ExemptBasisTypeCode>C</fc2:ExemptBasisTypeCode>				

Element Name:	ExemptEffectiveBeginDateText	minOccurs:	1	maxOccurs:	1
Description:	Exempt effective begin date (date). This element identifies the effective date of the exemption. When filing an initial designation, enter the date of the first transaction to be exempted. When filing an amended exemption, if the effective date of the exemption is not being amended, the date entered should be the same date the bank used in the "Effective date of exemption" field when the initial designation was made; otherwise, enter the revised date of the first transaction to be exempted. When filing a revoked exemption, enter the day after the date of the last transaction that was exempted. This element corresponds with the following item: • 2. Effective date of the exemption				
Attribute(s)	n/a				
Parent Element:	DesignationExemptActivity				
Element Restriction(s):	Required. This element must be recorded.				
Value Restriction(s):	The value provided must conform to the following requirements: 8 numeric characters in the format YYYYMMDD where YYYY = year, MM = month, and DD = day. Single digit days or months must be prefaced by a zero.				
Remarks:	The batch submission will be rejected if any of the following conditions are true: • The element is not recorded. • The element is recorded but does not contain a value. • The value recorded for the element is not in the required format (YYYYMMDD). The batch submission will be accepted with warning if any of the following conditions are true: • The value recorded is greater than the date of signature (FilingDateText). • The value recorded is less than January 1, 2000.				
Example:	<fc2:ExemptEffectiveBeginDateText>20190208</fc2:ExemptEffectiveBeginDateText>				

5. Party Elements by Party Type

The <Party> element is comprised of various elements and sub-elements that apply to specific party types (i.e. Transmitter, Individual from whom the cash was received, etc.). The chart below describes at a high level the party elements that apply to each party type.

Activity party type code definitions
35 = Transmitter | 37 = Transmitter Contact | 3 = Authorized Official
11 = Exempt Party | 45 = Exempt Filer Bank | 12 = Exempt Affiliated Bank

Element name	35	37	3	11	45	12
<fc2:Party SeqNum="">	●	●	●	●	●	●
<fc2:ActivityPartyTypeCode/>	●	●	●	●	●	●
<fc2:PartyAsEntityOrganizationIndicator/>				●		
<fc2:PrimaryRegulatorTypeCode/>					●	●
<fc2:PartyName SeqNum="">	●	●	●	●	●	●
<fc2:PartyNameTypeCode/>	●	●		●		
<fc2:RawEntityIndividualLastName/>				●		
<fc2:RawIndividualFirstName/>				●		
<fc2:RawIndividualMiddleName/>				●		
<fc2:RawIndividualNameSuffixText/>				●		
<fc2:RawIndividualTitleText/>			●			
<fc2:RawPartyFullName/>	●	●	●	●	●	●
</fc2:PartyName>	●	●	●	●	●	●
<fc2:Address SeqNum="">	●			●	●	●
<fc2:RawCityText/>	●			●	●	●
<fc2:RawCountryCodeText/>	●			●		
<fc2:RawStateCodeText/>	●			●	●	●
<fc2:RawStreetAddress1Text/>	●			●	●	●
<fc2:RawZIPCode/>	●			●	●	●
</fc2:Address>	●			●	●	●
<fc2:PhoneNumber SeqNum="">	●		●	●		
<fc2:PhoneNumberExtensionText/>				●		
<fc2:PhoneNumberText/>	●		●	●		
</fc2:PhoneNumber>	●		●	●		
<fc2:PartyIdentification SeqNum="">	●			●	●	●
<fc2:PartyIdentificationNumberText/>	●			●	●	●
<fc2:PartyIdentificationTypeCode/>	●			●	●	●
</fc2:PartyIdentification>	●			●	●	●
<fc2:PartyOccupationBusiness SeqNum="">				●		
<fc2:NAICSCode/>				●		
<fc2:OccupationBusinessText/>				●		
</fc2:PartyOccupationBusiness>				●		
<fc2:ElectronicAddress SeqNum="">				●		
<fc2:ElectronicAddressText/>				●		
</fc2:ElectronicAddress>				●		
</fc2:Party>	●	●	●	●	●	●

5.1. Party Record Examples

5.1.1. Transmitter

Party Type	Transmitter	minOccurs:	1	maxOccurs:	1
35	<fc2:Party SeqNum="4"> <fc2:ActivityPartyTypeCode>35</fc2:ActivityPartyTypeCode> <fc2:PartyName SeqNum="5">| <fc2:PartyNameTypeCode>L</fc2:PartyNameTypeCode> <fc2:RawPartyFullName>Transmitter legal name</fc2:RawPartyFullName> </fc2:PartyName> <fc2:Address SeqNum="6">| <fc2:RawCityText>Transmitter city</fc2:RawCityText> <fc2:RawCountryCodeText>US</fc2:RawCountryCodeText> <fc2:RawStateCodeText>VA</fc2:RawStateCodeText> <fc2:RawStreetAddress1Text>Transmitter street address</fc2:RawStreetAddress1Text> <fc2:RawZIPCode>22113</fc2:RawZIPCode> </fc2:Address> <fc2:PhoneNumber SeqNum="7">| <fc2:PhoneNumberText>7217894455</fc2:PhoneNumberText> </fc2:PhoneNumber> <fc2:PartyIdentification SeqNum="8">| <fc2:PartyIdentificationNumberText>458985215</fc2:PartyIdentificationNumberText> <fc2:PartyIdentificationTypeCode>2</fc2:PartyIdentificationTypeCode> </fc2:PartyIdentification> <fc2:PartyIdentification SeqNum="9">| <fc2:PartyIdentificationNumberText>PBSA8180</fc2:PartyIdentificationNumberText> <fc2:PartyIdentificationTypeCode>28</fc2:PartyIdentificationTypeCode> </fc2:PartyIdentification> </fc2:Party>				

5.1.2. Transmitter Contact

Party Type	Transmitter Contact	minOccurs:	1	maxOccurs:	1
37	<fc2:Party SeqNum="10">| <fc2:ActivityPartyTypeCode>37</fc2:ActivityPartyTypeCode> <fc2:PartyName SeqNum="11">| <fc2:PartyNameTypeCode>L</fc2:PartyNameTypeCode> <fc2:RawPartyFullName>Transmitter contact legal name</fc2:RawPartyFullName> </fc2:PartyName> </fc2:Party>				

5.1.3. Exempt Party

Party Type	Exempt Party	minOccurs:	1	maxOccurs:	1
11	<fc2:Party SeqNum="10">| <fc2:ActivityPartyTypeCode>11</fc2:ActivityPartyTypeCode> <fc2:PartyAsEntityOrganizationIndicator>Y</fc2:PartyAsEntityOrganizationIndicator> <fc2:PartyName SeqNum="24">| <fc2:PartyNameTypeCode>L</fc2:PartyNameTypeCode> <fc2:RawEntityIndividualLastName>Johnson Wedding Company</fc2:RawEntityIndividualLastName> </fc2:PartyName> <fc2:PartyName SeqNum="25">| <fc2:PartyNameTypeCode>DBA</fc2:PartyNameTypeCode> <fc2:RawPartyFullName>JWC</fc2:RawPartyFullName> </fc2:PartyName> <fc2:Address SeqNum="26">|			

Party Type	Exempt Party	minOccurs:	1	maxOccurs:	1
	<fc2:RawCityText>Rockcreek</fc2:RawCityText> <fc2:RawStateCodeText>NY</fc2:RawStateCodeText> <fc2:RawStreetAddress1Text>987 Flint Street</fc2:RawStreetAddress1Text> <fc2:RawZIPCode>21121</fc2:RawZIPCode> </fc2:Address> <fc2:PhoneNumber SeqNum="27"><fc2:PhoneNumberExtensionText>4412</fc2:PhoneNumberExtensionText> <fc2:PhoneNumberText>3659855214</fc2:PhoneNumberText> </fc2:PhoneNumber> <fc2:PartyIdentification SeqNum="28"><fc2:PartyIdentificationNumberText>212121211</fc2:PartyIdentificationNumberText> <fc2:PartyIdentificationTypeCode>2</fc2:PartyIdentificationTypeCode> </fc2:PartyIdentification> <fc2:PartyOccupationBusiness SeqNum="29"><fc2:NAICSCode>554</fc2:NAICSCode> <fc2:OccupationBusinessText>Wedding Planner</fc2:OccupationBusinessText> </fc2:PartyOccupationBusiness> <fc2:ElectronicAddress SeqNum="30"><fc2:ElectronicAddressText>johnson@wedding.org</fc2:ElectronicAddressText> </fc2:ElectronicAddress> </fc2:Party>				

5.1.4. Exempt Filer Bank

Party Type	Exempt Filer Bank	minOccurs:	1	maxOccurs:	1
45	<fc2:Party SeqNum="11"><fc2:ActivityPartyTypeCode>45</fc2:ActivityPartyTypeCode> <fc2:PrimaryRegulatorTypeCode>1</fc2:PrimaryRegulatorTypeCode> <fc2:PartyName SeqNum="31"><fc2:RawPartyFullName>Bank of the West</fc2:RawPartyFullName> </fc2:PartyName> <fc2:Address SeqNum="32"><fc2:RawCityText>Cityville</fc2:RawCityText> <fc2:RawStateCodeText>AZ</fc2:RawStateCodeText> <fc2:RawStreetAddress1Text>555 Rolling Creek Way</fc2:RawStreetAddress1Text> <fc2:RawZIPCode>554478985</fc2:RawZIPCode> </fc2:Address> <fc2:PartyIdentification SeqNum="33"><fc2:PartyIdentificationNumberText>318181818</fc2:PartyIdentificationNumberText> <fc2:PartyIdentificationTypeCode>2</fc2:PartyIdentificationTypeCode> </fc2:PartyIdentification> <fc2:PartyIdentification SeqNum="34"><fc2:PartyIdentificationNumberText>445581258</fc2:PartyIdentificationNumberText> <fc2:PartyIdentificationTypeCode>14</fc2:PartyIdentificationTypeCode> </fc2:PartyIdentification> </fc2:Party>				

5.1.1. Exempt Affiliated Bank

Party Type	Exempt Affiliated Bank	minOccurs:	0	maxOccurs:	99
12	<fc2:Party SeqNum="11"><fc2:ActivityPartyTypeCode>12</fc2:ActivityPartyTypeCode> <fc2:PrimaryRegulatorTypeCode>1</fc2:PrimaryRegulatorTypeCode> <fc2:PartyName SeqNum="31"><fc2:RawPartyFullName>West Down Station Bank</fc2:RawPartyFullName> </fc2:PartyName> <fc2:Address SeqNum="32"><fc2:RawCityText>Cityville</fc2:RawCityText>				

Party Type	Exempt Affiliated Bank	minOccurs:	0	maxOccurs:	99
	<fc2:RawStateCodeText>AZ</fc2:RawStateCodeText> <fc2:RawStreetAddress1Text>19 Rolling Meadows Avenue</fc2:RawStreetAddress1Text> <fc2:RawZIPCode>44578</fc2:RawZIPCode> </fc2:Address> <fc2:PartyIdentification SeqNum="33"><fc2:PartyIdentificationNumberText>665523259</fc2:PartyIdentificationNumberText> <fc2:PartyIdentificationTypeCode>2</fc2:PartyIdentificationTypeCode> </fc2:PartyIdentification> <fc2:PartyIdentification SeqNum="34"><fc2:PartyIdentificationNumberText>332211454</fc2:PartyIdentificationNumberText> <fc2:PartyIdentificationTypeCode>14</fc2:PartyIdentificationTypeCode> </fc2:PartyIdentification> </fc2:Party>				

5.1.1. Authorized Official

Party Type	Designated Contact Office	minOccurs:	1	maxOccurs:	1
3	<fc2:Party SeqNum="88"><fc2:ActivityPartyTypeCode>3</fc2:ActivityPartyTypeCode> <fc2:PartyName SeqNum="89"><fc2:RawIndividualTitleText>Authorizing person title</fc2:RawIndividualTitleText> <fc2:RawPartyFullName>Authorizing person name</fc2:RawPartyFullName> </fc2:PartyName> </fc2:Party>				

6. FinCEN DOEP XML Acknowledgement Format

The FinCEN DOEP XML batch acknowledgement file defined below is provided in XML format. The acknowledgement file will contain a BSA Identifier and any corresponding acknowledgement errors associated with each FinCEN DOEP <Activity> element received in the batch submission. Please visit https://www.fincen.gov/sites/default/files/schema/base/EFL_BatchAcknowledgementSchema.xsd to access the FinCEN XML 2.0 batch acknowledgement schema file.

6.1. XML File Structure

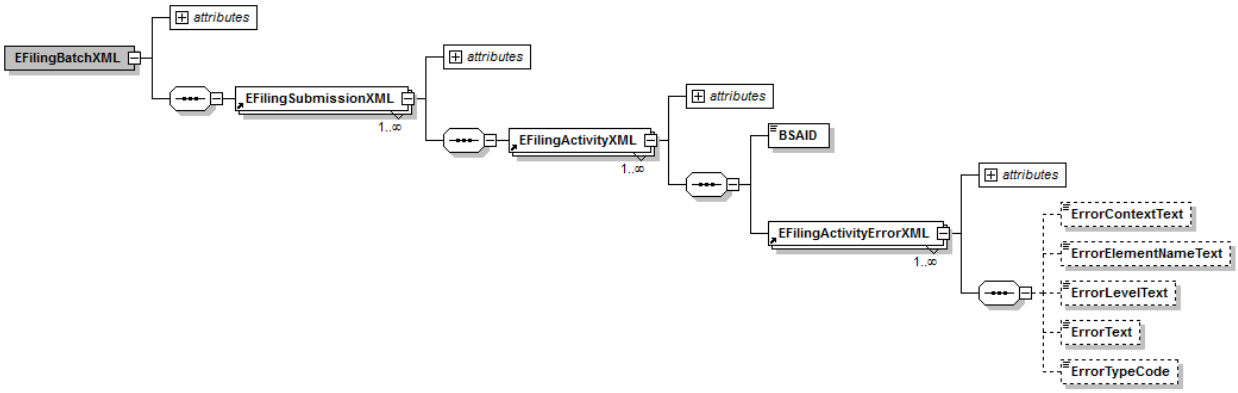

6.1.1. XML declaration/prolog

The XML declaration appears on the first line of the acknowledgement file.

Element Name:	?xml	minOccurs:	1	maxOccurs:	1
Description:	XML declaration/prolog. This is the XML declaration which specifies the XML version and character encoding used in the file.				
Attribute(s):	version. The version number of the XML. The value recorded will be "1.0" encoding. The character encoding used for the XML. The value recorded will be "UTF-8"				
Parent Element:	n/a				
Element Restriction(s)	This declaration will always be recorded on the first line of the file.				
Value Restriction(s):	The value provided will be: • <?xml version="1.0" encoding="UTF-8"?>				
Remarks:	none				
Example:	<?xml version="1.0" encoding="UTF-8"?>				

6.1.2. EFilingBatchXML

The <EFilingBatchXML> element is the first element recorded in the file and is considered the root element.

Element Name:	EFilingBatchXML	minOccurs:	1	maxOccurs:	1
Description:	Batch acknowledgement (header). This is the container for the contents of the batch acknowledgement file. This element is parent to the following sub-elements: EFilingSubmissionXML * NOTE: Elements marked with an asterisk * contain sub-elements.				

Attribute(s):	SeqNum (this is a sequential number assigned by FinCEN to identify the corresponding element in the associated batch file) StatusCode (this will have a value of "A" to indicate "Acknowledged")
Parent Element:	n/a (this is the root element in the acknowledgment file)
Element Restriction(s)	This element will always be recorded.
Value Restriction(s):	n/a
Remarks:	n/a
Example:	<EFilingBatchXML SeqNum="1" StatusCode="A">

6.1.3. EFilingSubmissionXML

The <EFilingSubmissionXML> element directly follows the <EFilingBatchXML> root element. This element is for FinCEN use only.

Element Name:	EFilingSubmissionXML	minOccurs:	1	maxOccurs:	1
Description:	Submission acknowledgement (header). This is the container for all FinCEN DOEP <Activity> elements recorded in the associated batch submission. This element is parent to the following sub-elements: EFilingActivityXML * NOTE: Elements marked with an asterisk * contain sub-elements.				
Attribute(s):	xmlns (this will always be www.fincen.gov/base) SeqNum (this is a sequential number assigned by FinCEN to identify the corresponding element in the associated batch file) StatusCode (this will have a value of "A" to indicate "Acknowledged")				
Parent Element:	EFilingBatchXML				
Element Restriction(s):	This element will always be recorded.				
Value Restriction(s):	n/a				
Remarks:	This element is for FinCEN use only.				
Example:	<EFilingSubmissionXML xmlns="www.fincen.gov/base" SeqNum="1" StatusCode="A">				

6.1.4. EFilingActivityXML

Each <EFilingActivityXML> element in the batch acknowledgement file corresponds with each FinCEN DOEP <Activity> element recorded in the original batch submission along with the sequence number (SeqNum) attribute value.

Element Name:	EFilingActivityXML	minOccurs:	1	maxOccurs:	unbounded
Description:	Activity acknowledgement (header). This is the container for acknowledgement information for each FinCEN DOEP <Activity> element recorded in the associated batch submission. This element is parent to the following sub-elements: BSAID EFilingActivityErrorXML * NOTE: Elements marked with an asterisk * contain sub-elements.				
Attribute(s):	SeqNum (this sequential number matches the value recorded in the associated batch submission)				

Parent Element:	EFilingSubmissionXML
Value Restriction(s):	n/a
Remarks:	none
Example:	<EFilingActivityXML SeqNum="1"> <BSAID>31000055053784</BSAID> <EFilingActivityErrorXML SeqNum="1"/> </EFilingActivityXML>

Element Name:	BSAID	minOccurs:	1	maxOccurs:	1
Description:	Activity acknowledgement BSA Identifier (text). This element identifies the BSA Identifier (BSA ID) assigned by FinCEN to the FinCEN DOEP document.				
Attribute(s):	n/a				
Parent Element:	EFilingActivityXML				
Value Restriction(s):	14 characters (numeric only)				
Remarks:	none				
Example:	<BSAID>31000055053784</BSAID>				

6.1.5. EFilingActivityErrorXML

There will be at least one <EFilingActivityErrorXML> element for each <EFilingActivityXML> element in the batch acknowledgement file.

Element Name:	EFilingActivityErrorXML	minOccurs:	1	maxOccurs:	unbounded
Description:	Activity acknowledgement error (header). This is the container for error information generated during processing of the associated batch submission related to the FinCEN DOEP activity. This element is parent to the following sub-elements: ErrorContextText ErrorElementNameText ErrorLevelText ErrorText ErrorTypeCode				
Attribute(s):	SeqNum (this is a sequential number assigned by FinCEN)				
Parent Element:	EFilingActivityXML				
Value Restriction(s):	n/a				
Remarks:	If there are no errors identified for the FinCEN DOEP activity, then the <EFilingActivityErrorXML> element will be recorded with a self-closing tag (e.g. <EFilingActivityErrorXML SeqNum="1"/>) and this element will not be recorded.				
Example:	<EFilingActivityErrorXML SeqNum="1"> <ErrorContextText>EFilingBatchXML/Activity[1]/EFilingPriorDocumentNumber</ErrorContextText> <ErrorElementNameText>EFilingPriorDocumentNumber</ErrorElementNameText> <ErrorLevelText>WARN</ErrorLevelText> <ErrorText>The BSA ID is not provided and the type of filing is exemption amended or exemption revoked.</ErrorText> <ErrorTypeCode>D03</ErrorTypeCode> </EFilingActivityErrorXML>				

Element Name:	ErrorContextText	minOccurs:	0	maxOccurs:	1
Description:	Acknowledgement error type (text). This element identifies the element location (within the associated batch submission) that triggered the error by identifying the name and sequence number of the element's <Parent> element.				
Attribute(s):	n/a				
Parent Element:	EFilingActivityErrorXML				
Value Restriction(s):	1-4000 characters				
Remarks:	If there are no errors identified for the FinCEN DOEP activity, then the <EFilingActivityErrorXML> element will be recorded with a self-closing tag (e.g. <EFilingActivityErrorXML SeqNum="1"/>) and this element will not be recorded.				
Example:	<ErrorContextText>EFilingBatchXML/Activity[1]/EFilingPriorDocumentNumber</ErrorContextText>				

Element Name:	ErrorElementNameText	minOccurs:	0	maxOccurs:	1
Description:	Element acknowledgement error association (text). This element identifies the element name from the associated batch submission that triggered the error.				
Attribute(s):	n/a				
Parent Element:	EFilingActivityErrorXML				
Value Restriction(s):	1-512 characters				
Remarks:	If there are no errors identified for the FinCEN DOEP activity, then the <EFilingActivityErrorXML> element will be recorded with a self-closing tag (e.g. <EFilingActivityErrorXML SeqNum="1"/>) and this element will not be recorded.				
Example:	<ErrorElementNameText>EFilingPriorDocumentNumber</ErrorElementNameText>				

Element Name:	ErrorLevelText	minOccurs:	0	maxOccurs:	1
Description:	Acknowledgement error severity level (text). This element identifies the level of severity associated with the error.				
Attribute(s):	n/a				
Parent Element:	EFilingActivityErrorXML				
Value Restriction(s):	1-50 characters				
Remarks:	If there are no errors identified for the FinCEN DOEP activity, then the <EFilingActivityErrorXML> element will be recorded with a self-closing tag (e.g. <EFilingActivityErrorXML SeqNum="1"/>) and this element will not be recorded.				
Example:	<ErrorLevelText>WARN</ErrorLevelText>				

Element Name:	ErrorText	minOccurs:	0	maxOccurs:	1
Description:	Acknowledgement error description (text). This element identifies the description of the error.				
Attribute(s):	n/a				
Parent Element:	EFilingActivityErrorXML				
Value Restriction(s):	1-525 characters				
Remarks:	If there are no errors identified for the FinCEN DOEP activity, then the <EFilingActivityErrorXML> element will be recorded with a self-closing tag (e.g. <EFilingActivityErrorXML SeqNum="1"/>) and this element will not be recorded.				
Example:	<ErrorText>The BSA ID is not provided and the type of filing is exemption amended or exemption revoked.</ErrorText>				

Element Name:	ErrorTypeCode	minOccurs:	0	maxOccurs:	1
Description:	Acknowledgement error type (code). This element identifies the code associated with the error.				
Attribute(s):	n/a				
Parent Element:	EFilingActivityErrorXML				
Value Restriction(s):	1-50 characters				
Remarks:	If there are no errors identified for the FinCEN DOEP activity, then the <EFilingActivityErrorXML> element will be recorded with a self-closing tag (e.g. <EFilingActivityErrorXML SeqNum="1"/>) and this element will not be recorded.				
Example:	<ErrorTypeCode>D03</ErrorTypeCode>				

6.2. Acknowledgement XML Example

The following is a sample FinCEN DOEP acknowledgement XML generated by FinCEN and delivered to the batch filer.

File type	FinCEN DOEP XML Batch Acknowledgement (Sample)
Example:	<?xml version="1.0" encoding="UTF-8"?> <EFilingBatchXML xmlns="www.fincen.gov/base" SeqNum="1" StatusCode="A"> <EFilingSubmissionXML SeqNum="1" StatusCode="A"> <EFilingActivityXML SeqNum="1"> <BSAID>31000055053784</BSAID> <EFilingActivityErrorXML SeqNum="1"> <ErrorContextText>EFilingBatchXML/Activity[1]/Party[25]/PartyName[30]/RawIndividualFirstName</ErrorContextText> <ErrorElementNameText>RawIndividualFirstName</ErrorElementNameText> <ErrorLevelText>WARN</ErrorLevelText> <ErrorText>The exempt person is an individual and first name is not provided.</ErrorText> <ErrorTypeCode>P02</ErrorTypeCode> </EFilingActivityErrorXML> <EFilingActivityErrorXML SeqNum="2"><ErrorContextText>EFilingBatchXML/Activity[1]/Party[78]/Address[84]/RawZIPCode</ErrorContextText> <ErrorElementNameText>RawIndividualFirstName</ErrorElementNameText> <ErrorLevelText>WARN</ErrorLevelText> <ErrorText>The ZIP Code of the bank is not provided.</ErrorText> <ErrorTypeCode>B08</ErrorTypeCode> </EFilingActivityErrorXML> </EFilingActivityXML> <EFilingActivityXML SeqNum="2"><BSAID>31000055053785</BSAID> <EFilingActivityErrorXML SeqNum="1"/> </EFilingActivityXML> <EFilingActivityXML SeqNum="3"><BSAID>31000055053786</BSAID> <EFilingActivityErrorXML SeqNum="1"/> </EFilingActivityXML> </EFilingSubmissionXML> </EFilingBatchXML>
Notes:	The sample above consists of three (3) FinCEN DOEP activities based on the original FinCEN DOEP batch submission: • Each FinCEN DOEP from the original batch submission is associated with a <EFilingActivityXML> element • Each FinCEN DOEP receives a unique BSA Identifier (BSA ID) • FinCEN DOEP (BSA ID: 31000055053784) contains two errors (P02 & B08) • FinCEN DOEP (BSA ID: 31000055053785) contains no errors • FinCEN DOEP (BSA ID: 31000055053786) contains no errors

7. Attachment A – Error Descriptions

The following table lists the errors that your batch may receive as a result of missing or invalid data formatting. FinCEN strongly encourages that filers first test their XML batch files for schema compliance using the schemas available at www.fincen.gov/base. Your batch file should pass schema validation before you attempt to submit to FinCEN. As a result, this table does not include all possible schema validation errors, as these will be handled by your XML software during testing. Your batch file must pass schema validation before attempting to submit to FinCEN via BSA E-Filing; otherwise, it will be rejected.

Error Level

Fatal
Batch rejection
These errors are related to the batch format and must be resolved before attempting to resubmit the batch.

Primary Warning
Batch acceptance with warning(s) classified as primary data errors
These errors violate electronic filing requirements or report instructions and so degrade FinCEN DOEP data quality that they must be corrected (along with warning errors) as a correction/amendment FinCEN DOEP. Error codes marked with an asterisk (*) in the tables below are primary warnings.

Warning
Batch acceptance with warning(s) classified as secondary data errors.
These errors that violate electronic filing requirements or report instructions but have a lesser impact on FinCEN DOEP data quality.

7.1. General errors

These errors can occur throughout the batch file:

Code	Error Text	Severity	Associated Element(s)	Form Reference
A00	Schema Validation Failure. The batch XML does not conform to the basic schema requirements for this form type and therefore the batch submission has been rejected. Please validate the batch against the associated XML schema to ensure it is properly formatted before attempting to resubmit.	Fatal	n/a	n/a
A03	The element is recorded for an inappropriate party type	Fatal	Miscellaneous	Miscellaneous
A04	The element is recorded but all sub-elements are missing.	Fatal	Miscellaneous	Miscellaneous
A05	The element contains a value that is not valid for the associated party type.	Fatal	Miscellaneous	Miscellaneous
A06	The reported attribute count does not match the actual count.	Fatal	EFilingBatchXML: ActivityCount and/or PartyCount	n/a
A07	The value is null or not equal to DOEPX.	Fatal	FormTypeCode	n/a
A08	The value recorded is a numeric entry not equal to 14 digits (with the exceptions of "0").	Fatal	EFilingPriorDocumentNumber	BSA ID
A09	The critical element is not recorded or does not contain a value.	Fatal	Miscellaneous	Miscellaneous

Code	Error Text	Severity	Associated Element(s)	Form Reference
A10	The element is not recorded or does not contain a value.	Warning	Miscellaneous	Miscellaneous
A11	The value recorded for the critical element is not valid.	Fatal	Miscellaneous	Miscellaneous
A12	The value recorded for the element is invalid.	Warning	Miscellaneous	Miscellaneous
A13	The element recorded conflicts with one or more recorded critical elements.	Fatal	Miscellaneous	Miscellaneous
A14	The element recorded conflicts with one or more recorded elements.	Warning	Miscellaneous	Miscellaneous
E00	This submission has been rejected because it contains significant errors. Please fix and re-submit the file.	Information	This error code is produced when the batch is rejected due to one or more fatal errors.	Miscellaneous

7.2. Document Errors

These errors can occur at the FinCEN DOEP document level:

Code	Error Text	Severity	Associated Element(s)	Form Reference
D01	The type of filing is not indicated.	Fatal	ActivityAssociation ExemptionAmendedIndicator ExemptionRevokedIndicator InitialDesignationIndicator	1 Indicate the type of Filing
D02	More than one type of filing is indicated.	Fatal	ExemptionAmendedIndicator ExemptionRevokedIndicator InitialDesignationIndicator	1 Indicate the type of Filing
D03	The BSA ID is not provided and the type of filing is exemption amended or exemption revoked.	Warning	EFilingPriorDocumentNumber	1 BSA Identifier
D04	The BSA ID is provided and the type of filing is not exemption amended or exemption revoked.	Warning	EFilingPriorDocumentNumber	1 BSA Identifier
D05*	The effective date of the exemption is greater than the date of signature (FilingDateText) or is less than January 1, 2000.	Warning	ExemptEffectiveBeginDateText	2 Effective date of the exemption
D06	The phone number recorded for the Authorized Official is invalid.	Warning	PhoneNumberText	29 Phone number (include area code)
D07	The date of signature is greater than the current date or less than January 1, 2000.	Warning	FilingDateText	30 Date of signature
D08	Missing Transmitter party type	Fatal	Transmitter (35)	NA
D09	More than one Transmitter party type is recorded.	Fatal	Transmitter (35))	NA
D10	Missing Transmitter Contact party type.	Fatal	Transmitter Contact (37)	NA
D11	More than one Transmitter Contact party type recorded.	Fatal	Transmitter Contact (37)	NA
D12	Missing Exempt Party party type.	Fatal	Exempt Party (11)	Part II (Items: 3-16)
D13	More than one Exempt Party party type is recorded.	Fatal	Exempt Party (11)	Part II (Items: 3-16)
D14	Missing Exempt Filer Bank party type.	Fatal	Exempt Filer Bank (45)	Part III (Items: 17-25)
D15	More than one Exempt Filer Bank party type is recorded.	Fatal	Exempt Filer Bank (45)	Part III (Items: 17-25)

Code	Error Text	Severity	Associated Element(s)	Form Reference
D16	More than 99 Exempt Affiliate Bank party types are recorded.	Fatal	Exempt Affiliated Bank (12)	Affiliated Bank (Items: 17-24)
D17	More than one Authorized Official party type is recorded.	Fatal	Authorized Official (3)	Part IV (Items: 26, 27, 29, 29a)

7.3. Exempt Person (Part II) Errors

These errors can occur at the FinCEN DOEP document level associated with the Part II Exempt Person section of the form:

Code	Error Text	Severity	Associated Element(s)	Form Reference
P01*	The last name/entity legal name of the exempt person is not provided.	Warning	PartyName PartyNameTypeCode RawEntityIndividualLastName	3 Individual's last name or entity's legal name of the exempt person
P02*	The exempt person is an individual and first name is not provided.	Warning	PartyAsEntityOrganizationIndicator PartyName PartyNameTypeCode RawIndividualFirstName	4 First name ("If entity" not indicated)
P03	The exempt person is an entity and first name is provided.	Warning	PartyAsEntityOrganizationIndicator PartyName PartyNameTypeCode RawIndividualFirstName	4 First name ("If entity" indicated)
P04	The exempt person is an entity and middle name is provided.	Warning	PartyAsEntityOrganizationIndicator PartyName PartyNameTypeCode RawIndividualMiddleName	5 Middle name ("If entity" indicated)
P05	The exempt person is an entity and suffix name is provided.	Warning	PartyAsEntityOrganizationIndicator PartyName PartyNameTypeCode RawIndividualNameSuffixText	5 Suffix name ("If entity" indicated)
P06	The address of the exempt person is not provided.	Warning	Address	8-11. Address
P07	The street address of the exempt person is not provided.	Warning	RawStreetAddress1Text	8. Address
P08	The city of the exempt person is not provided.	Warning	RawCityText	9. City
P09	The state/territory of the exempt person is not provided.	Warning	RawStateCodeText	10. State
P10	The state/territory code of the exempt person is invalid.	Warning	RawStateCodeText	10. State
P11	The state/territory/country code mismatch.	Warning	RawStateCodeText RawCountryCodeText	10. State
P12	The ZIP Code of the exempt person is not provided.	Warning	RawZIPCode	11. ZIP Code
P13	The ZIP Code of the exempt person is invalid.	Warning	RawZIPCode	11. ZIP Code
P14	The TIN of the exempt person is not provided.	Warning	PartyIdentification PartyIdentificationNumberText PartyIdentificationTypeCode	12. TIN 13. TIN Type
P15	The TIN of the exempt person is invalid.	Warning	PartyIdentificationNumberText	12. TIN
P16	The email address of the exempt person is invalid.	Warning	ElectronicAddressText	14. E-mail address

Code	Error Text	Severity	Associated Element(s)	Form Reference
P17	The phone number of the exempt person is invalid.	Warning	PhoneNumberText	15. Phone number

7.4. Filer (Part III) & Affiliated Bank Errors

These errors can occur at the FinCEN DOEP document level associated with the Part II Filer, as well as the Affiliated Bank, sections of the form:

Code	Error Text	Severity	Associated Element(s)	Form Reference
B01	The primary regulator of the bank is not provided.	Warning	PrimaryRegulatorTypeCode	24. Bank's primary federal regulator
B02*	The legal name of the bank is not provided.	Warning	PartyName RawPartyFullName	17. Name of Bank
B03	The address of the bank is not provided.	Warning	Address	20-23. Address
B04	The street address of the bank is not provided.	Warning	RawStreetAddress1Text	20. Address
B05	The city of the bank is not provided.	Warning	RawCityText	21. City
B06	The state/territory of the bank is not provided.	Warning	RawStateCodeText	22. State
B07	The state/territory code of the bank is invalid.	Warning	RawStateCodeText	22. State
B08	The ZIP Code of the bank is not provided.	Warning	RawZIPCode	23. ZIP Code
B09	The ZIP Code of the bank is invalid.	Warning	RawZIPCode	23. ZIP Code
B10*	The EIN of the bank is not provided.	Warning	PartyIdentification PartyIdentificationNumberText PartyIdentificationTypeCode	18. EIN
B11*	The EIN of the bank is invalid.	Warning	PartyIdentificationNumberText	18. EIN
B12	The FinCEN DOEP does not include an Exempt Affiliated Bank party type but the DesignatedMoreThanOneBankIndicator element is recorded with a Y value.	Warning	DesignatedMoreThanOneBankIndicator	25. If this designation is also being made for one or more affiliated banks
B13	The FinCEN DOEP contains one or more Exempt Affiliated Bank party types but the DesignatedMoreThanOneBankIndicator element is not recorded with a Y value.	Warning	DesignatedMoreThanOneBankIndicator	25. If this designation is also being made for one or more affiliated banks

7.5. Transmitter & Transmitter Contact Errors

These errors can occur at the FinCEN DOEP document level associated with Transmitter of the batch as well as the Transmitter Contact:

Code	Error Text	Severity	Associated Element(s)	Form Reference
T01	The legal name is not recorded.	Warning	Party: Transmitter (35) and/or Transmitter contact (37)	n/a
T02	The element is not recorded.	Warning	Address (Transmitter (35))	n/a
T03	The element is not recorded or does not contain a value.	Warning	RawCityText (Transmitter (35))	n/a
T04	The element is not recorded or does not contain a value.	Warning	RawCountryCodeText (Transmitter (35))	n/a
T05	The element is not recorded or does not contain a value when the country is US, CA, MX, or a U.S. Territory.	Warning	RawStateCodeText (Transmitter (35))	n/a

Code	Error Text	Severity	Associated Element(s)	Form Reference
T06	The element is recorded but does not contain a value.	Warning	RawStreetAddress1Text (Transmitter (35))	n/a
T07	The element is not recorded or does not contain a value.	Warning	RawZIPCode (Transmitter (35))	n/a
T08	The element is recorded but does not contain a value	Warning	PhoneNumberText (Transmitter (35))	n/a
T09	The element is not recorded for this party type information.	Warning	PartyIdentification (EIN) (Transmitter (35))	n/a
T10	The element is not recorded for this party type information.	Warning	PartyIdentification (TCC) (Transmitter (35))	n/a
T11	The element contains an invalid value.	Warning	RawCountryCodeText RawStateCodeText (Transmitter (35))	n/a
T12	The state/territory/country code mismatch.	Warning	RawCountryCodeText RawStateCodeText (Transmitter (35))	n/a
T13	The element contains a value for the Transmitter and the country is not US, CA, MX, or a U.S. Territory.	Warning	RawStateCodeText RawCountryCodeText (Transmitter (35))	n/a

8. Attachment B – Error Correction Instructions

This attachment identifies the requirements and procedures for correcting FinCEN DOEP errors reported to batch filers during the FinCEN DOEP acknowledgement process.

Error Categories:

There are two main categories of errors identified in batch files: Schema validation errors that result in automatic rejection of the batch file and data errors that represent errors in data entered for individual elements but may not result in a rejection.

Schema validation errors prevent the batch file from being processed and are considered fatal errors. An example of a schema validation error is a missing required element or an element sequence that does not match the schema. An example of a data error is a required element that contains no value.

Data errors are classified as primary or secondary warnings, depending on their importance. Primary warnings are file errors that violate electronic filing requirements or instructions and so degrade FinCEN DOEP data quality that they must be corrected. Primary warnings make it difficult for regulators, analysts, and law enforcement investigators to locate the FinCEN DOEP in the database or identify the nature and circumstances of the FinCEN DOEP. Examples of such warnings include blank last names or legal names, missing financial institution Employer Identification Numbers, or an invalid entry in the FinCEN DOEP date field. Attachment A – Error Descriptions identifies primary errors by adding an asterisk (*) to the error code.

Secondary warnings are data errors that violate electronic filing requirements or instructions but have a lesser impact on FinCEN DOEP data quality. Examples of secondary errors are ZIP Codes that end in four zeros (e.g. 123450000), missing dates of birth, or invalid telephone numbers.

Correction Requirements:

Filers should immediately correct and resubmit a batch file rejected for fatal errors when notified by FinCEN the batch file was not accepted.

When an accepted batch file contains FinCEN DOEP with primary warning errors, those FinCEN DOEP must be re-filed as a corrected report with the primary errors and any secondary errors corrected. FinCEN DOEP that contain only secondary errors need not be corrected. FinCEN requires that filers prevent all reported errors in their future filings. FinCEN recommends that data error corrections be made no later than 30 days after receiving error notifications. Furthermore, FinCEN recommends that filers remedy any systemic problems in their electronic submissions within 30 days of receiving error notifications. If technical issues prevent filers from implementing corrections within these time frames, filers should notify FinCEN by writing to:

Financial Crimes Enforcement Network
Office of Domestic Liaison
Data Quality Assessments
P.O. Box 39
Vienna, VA 22183

This correspondence should explain the technical issues involved that prevent meeting the time frame, provide an estimate of when the issues will be resolved, and include a contact name and telephone number.

Correction Procedures:

FinCEN DOEP batch files are rejected when they contain fatal format errors. Filers must correct all fatal errors identified in the batch file and resubmit the batch file to BSA E-Filing. Because they were not accepted by FinCEN, initial report FinCEN DOEP in the re-submitted batch file are still initial reports. Do not identify FinCEN DOEP from a rejected batch file as Amended reports unless they originally were filed as Amended reports.

If errors in a FinCEN DOEP from an accepted batch file involve primary warning errors, filers should correct all errors (primary and secondary warning errors) and file an amended report on that FinCEN DOEP using the following procedures:

- Make the corrections to all errors in the FinCEN DOEP in the accepted batch file.
- Record "Y" in the ExemptionAmendedIndicator element under the Activity Association parent element in each FinCEN DOEP to be amended.
- Record in the EFilingPriorDocumentNumber element under the Activity parent element the BSA Identifier (from the FinCEN DOEP Acknowledgement) that was assigned to the FinCEN DOEP being amended.
- Ensure that the FilingDateText element contains a new date.
- Complete all other data in the FinCEN DOEP in their entirety.
- Transmit the amended FinCEN DOEP in a new batch file. Do not re-transmit the original batch file because this will cause duplicate database entries on FinCEN DOEPs that were not amended.

9. Attachment C – Electronic XML Filing Instructions

The following instructions apply only to the electronic filing of the Designation of Exempt Person (DOEP) report, FinCEN Form 110, through FinCEN's BSA E-Filing System. These instructions do not apply to any other current or prior Bank Secrecy Act reports.

General Information

The Bank Secrecy Act and its implementing regulations require banks to file currency transaction reports on transactions in currency of more than $10,000. The regulations also permit a bank to exempt certain customers from currency transaction reporting in accordance with 31 CFR 1020.315.

Banks are the only type of financial institutions that may exempt customers from CTR filing requirements. The term bank is defined in 31CFR 1010.100(d); and includes savings and loan associations, thrift institutions, and credit unions.

The customers that the bank may exempt are called "exempt persons." An exempt person may be a bank, government agency/government authority, listed company, listed company subsidiary, eligible non-listed business, or payroll customer.

A bank may, but is not required to, use this report to notify the Treasury that the bank has revoked the designation of a customer as an exempt person.

FinCEN encourages banks to use the exemption procedure to the fullest extent. FinCEN reminds banks of their continuing obligation to monitor for and report suspicious activity with respect to transactions of all customers, including currency transactions conducted by exempt persons.

General Instructions

1. **Filing:** The DOEP should be e-filed through the BSA E-Filing System. Go to http://bsaefiling.fincen.treas.gov/index.jsp to register. Any bank that wishes to designate a customer as an exempt person must file the DOEP no later than 30 days after the first transaction to be exempted.
2. **Report Completion.** Complete the report in accordance with instructions for each item. Unless there is a specific instruction to the contrary, leave blank any items that do not apply.
3. **Dates.** Discrete DOEP filers must enter dates in MM/DD/YYYY format with MM = month, DD = day, and YYYY = year. Single digit months and days must begin with a zero. Batch filers must enter dates in YYYYMMDD format.
4. **Numbers.** Enter all numbers such as identifying and telephone numbers as single number strings without formatting or punctuation such as spaces, hyphens, or parenthesis.
5. **Addresses.** Enter the permanent street address, city, two-letter state or territory abbreviation, and ZIP Code. Provide the apartment number or suite number, if known, following the street address. A non-location address such as a post office box or rural route number should be used only if no other street address information is available. ZIP Codes must be five or nine digits. ZIP Codes must be entered without formatting or special characters such as hyphens. For example, the ZIP Code 12354-6120 would be entered as 123546120. Complete any address item that is known, even if the entire address is unknown. No abbreviations are permitted in city names, which must be completely spelled out. A U.S. city name should match the city name used by the U.S. Postal Service for the associated state and ZIP Code. Use only the authorized U.S. Postal Service state, territory, or military address abbreviations found at https://www.usps.com/ship/official-abbreviations.htm. When a Transmitter address involves a U.S. Territory the both state and country items elements must contain the U.S. Territory code as found in ISO 3166-1. Foreign batch filers who are completing the Transmitter Address element with foreign address information must use only the Canadian and Mexican state/territory/province codes and ISO country codes approved for use by FinCEN. For Canadian provinces and territories use the Canada Post Corporation codes found at http://www.canadapost.ca/tools/pg/manual/PGaddress-e.asp#1380608. For Mexican states and territories use the ISO 3166-2 three-letter codes found at http://www.commondatahub.com/live/geography/state_province_region/iso_3166_2_state_codes. For all

countries use the ISO 3166-1 two-letter country codes found at http://www.iso.org/iso/country_names_and_code_elements. NOTE: The ISO 3166-2 country list contains the code "UM" that stands for the United State Minor Outlying Islands. Using "UM" in country fields is prohibited. These islands are uninhabited. As such they have no addresses.

6. **Prohibited Words.** Do not use the following words or their variations in fields:
    a. AKA
    b. CUSTOMER
    c. DBA
    d. NONE
    e. NOT APPLICABLE
    f. OTHER
    g. SAME
    h. SAME AS ABOVE
    i. SEE ABOVE
    j. UNKNOWN
    k. VARIOUS
    l. XX

7. **Name Editing Instructions.** Because many names do not consist of a single first name, middle name, and last name, care must be taken to ensure these names are entered properly in the BSA SAR. This is especially important when there are separate fields for the last name, first name, and middle name. Some names have multiple surnames (family names) or multiple given names that do not include a middle name. Others may not be written in [first name] [middle name] [last name] order. Multiple surnames must be entered in the last name field. For example, Hispanic names may be written in the order of given name, father's last name, and mother's last name, e.g., "Juan Vega Santiago." Thus the surname "VEGA SANTIAGO" would be entered in the last name field with "JUAN" entered in the first name field. Some Hispanic surnames consist of three names (e.g., father's last name, mother's last name, and husband's father's last name in the case of a married woman). In that case all three would be entered in a last name field. Hispanic names do not have middle names, so a multiple Hispanic given name such as "Rosa Maria" would be recorded in the first name field. In some cultures names consist of multiple first names and a single family name, not necessarily in (first name) (last name) order. For example, the Korean name "Kim, Chun Nam" consists of the family name "Kim" and the first name "Chun Nam" separated by a comma and space. There is no middle name. In this case "KIM" would be entered in the last name field and "CHUN NAM" would be entered in the first name field. Nothing is entered in the middle name field. When an individual name is entered in a single name field it should be entered in [first name] [middle name] [last name] order regardless of any foreign naming conventions. Thus, "Kim, Chun Nam" would be entered as "CHUN NAM KIM" in a single name field. Punctuation and special characters should be used in names only when they are part of the name. For example, the period in "Expedia.Com" should be included because it is part of the name. Placing a period after a middle initial would be prohibited because the period is not part of the middle name. Abbreviations in names are prohibited unless an abbreviation is part of a legal name. Entry of middle initials is permitted when a middle name is unknown. A name suffix may be abbreviated, i.e. Junior can be JR, Senior can be SR, the Third can be III, etc.

Specific Instructions

Part I Filing Information

Item 1. Type of filing. Check only one of the three boxes 1a "Initial designation," 1b "Exemption amended," or 1c "Exemption revoked." If the DOEP amends or revokes a prior designation, include the Document Control Number or BSA Identifier of the prior filing in the associated number field. If this number is unknown, enter "00000000000000" in the number field. Leave the number field blank if the filing is an initial designation.

Item 2. Effective date of the exemption. For an initial designation, enter the date of the first transaction to be exempted. For amended DOEPs, if the effective date of the exemption is not being amended, the date entered should

be the same date the bank used in the "effective date of the exemption box" when the initial designation was made. If the effective date of the exemption is being amended, enter the revised date of the first transaction to be exempted. If an exemption is being revoked, enter the day after the date of the last transaction that was exempted.

Part II Exempt Person Information

Check here if entity. Check this box if the exempt person is an entity. Leave this box blank if the exempt person is an individual.

Item 3. Individual's last name or entity's legal name of the exempt person. If the exempt person is an entity, enter the full legal name of the exempt person as it is shown on the charter or other document creating the entity. For exempt individuals such as sole proprietorships, enter individual's last name.

Item 4. First name. Enter the first name of the exempt person if an individual.

Item 5. Middle name. Enter the middle name or initial of the exempt person if an individual.

Item 5. Suffix. Enter the name suffix such as JR, SR, III, etc. of the exempt person if an individual.

Item 6. Alternate name. Enter the individual's also known as (AKA) or the entity's doing business as (DBA) name if different from the name entered in Items 3-5. Do not include the acronyms AKA or DBA with the name.

Item 7. Occupation or type of business. Record the occupation, profession, or type of business of the exempt person. Use specific descriptions such as doctor, carpenter, attorney, used car dealership, plumber, truck driver, hardware store, etc. Do not use non-descriptive occupations such as businessman, merchant, retailer, or self-employed without indicating the nature of the occupations, e.g. shoe merchant or self-employed accountant.

Item 7a. NAICS Code. Select the North American Industry Classification System (NAICS) code for the occupation entered in Item 7. Batch filers should only use codes from the NAICS Code list on the BSA E-Filing Web Site at http://bsaefiling.fincen.treas.gov/main.html.

Item 8. Address. Enter the permanent street address of the business location of the exempt person. For exempt persons doing business at more than one physical location, enter the local headquarters address or local address of the exempt person. For individuals such as sole proprietorships, enter the business address of the individual rather than the home address, unless they are the same (see General Instruction 5).

Item 9. City. Enter the city associated with the business location of the exempt person. Do not abbreviate the city name (see General Instruction 5).

Item 10. State. Select the state or territory associated with the business location of the exempt person (see General Instruction 5).

Item 11. ZIP Code. Enter the ZIP Code associated with the business location of the exempt person. Use only the five or nine-digit ZIP Code assigned to the address by the U.S. Postal Service (see General Instruction 5).

Item 12. TIN. Enter the Employer Identification Number (EIN) or Social Security Number (SSN) of the exempt person. If a sole proprietorship does not have an EIN, enter the proprietor's Social Security Number (SSN).

Item 13. TIN type. Select the TIN type associated with the TIN in Item 12.

Item 14. E-mail address. Enter the e-mail address associated with the exempt person.

Item 15. Phone number. Enter the telephone number of the exempt person. Enter as a single number string without formatting and punctuation such as spaces, hyphens, or parenthesis.

Item 15a. Extension. Enter the telephone number extension of the exempt person.

Item 16. Type of exempt person. Check only one of the four boxes 16a "Listed company," 16b "Listed company subsidiary, 16c "Eligible non-listed business, or 16d "Payroll customer."

Part III Filer Information

Item 17. Name of bank. Enter the bank's full legal name.

Item 18. EIN. Enter the bank's EIN.

Item 19. RSSD. Enter the bank's Research Statistics Supervision Discount (RSSD) number.

Items 20 - 23. Address. Enter the bank's headquarters address (See General Instruction 5 and Part II address instructions for additional information on completing the filer address.).

Item 24. Primary federal regulator. Select the bank's primary federal regulator from the list. The options are:

- Federal Reserve Board (FRB)
- Federal Deposit Insurance Corporation (FDIC)
- Internal Revenue Service (IRS)
- National Credit Union Administration (NCUA)
- Office of the Comptroller of the Currency (OCC)

Item 25. Affiliated banks. A parent holding company or one of its bank subsidiaries may make the designation of exempt person on behalf of some or all holding company bank subsidiaries so long as the designation lists each bank subsidiary that will treat the customer as an exempt person. Check the box in Item 25 and complete an Affiliated Bank Information section on each affiliated bank. Batch filers will complete an Exempt Affiliated Bank Party element on each affiliated bank included in the DOEP. Up to 99 affiliated banks can be included in a single DOEP.

Part IV Signature

Item 26. Print name. Enter the name of the bank official who authorized the exemption.

Item 27. Title. Enter the title of the bank official who authorized the exemption.

Item 28. Signature. This report is signed when the discrete report or batch file is signed with a personal identification number (PIN) assigned to an appropriate bank official by the BSA E-Filing System.

Item 29. Phone number. Enter the telephone number of the bank official who authorized the exemption.

Item 29a. Extension. Enter the telephone number extension of the bank official who authorized the exemption.

Item 30. Date of signature. If the DOEP is a discrete filing, this date will be supplied by the BSA E-Filing System when the report is signed with a PIN. Batch filers must enter the signature date in YYYYMMDD format.

Paperwork Reduction Act Notice: The purpose of this report is to provide an effective means for banks and depository institutions to exempt eligible customers from currency transaction reporting. This report is required by law, pursuant to 31 CFR 1020.315 Federal law enforcement and regulatory agencies, including the U.S. Department of Treasury and other authorized authorities, may use and share this information. You are not required to provide the requested information unless a report displays a valid OMB control number. Public reporting and recordkeeping burden for this report is estimated to average 70 minutes per response, and includes time to gather and maintain information for the required report, review the instructions, and complete the information collection. The record retention period is five years. Send comments regarding this burden estimate, including suggestions for reducing the burden, to Financial Crimes Enforcement Network, Attention: Paperwork Reduction Act, P. O. Box 39, Vienna, VA 22183-0039.

10. Attachment D – Secure Data Transfer Mode Filers

FinCEN provides the ability for filers to submit the FinCEN DOEP XML batch file securely via the Internet using a VPN device or Connect:Direct software. This method of filing is referred to as Secure Data Transfer Mode (SDTM). SDTM allows for a secure, system to system mechanism for transferring batch submissions from your organization's internal server to the BSA E-Filing server. The batch submission process can be automated such that user intervention/involvement is minimized. There is no interaction with the BSA E-Filing system web site for the upload of the batch file but the BSA E-Filing system web site is used to track the status of the submissions.

For filers using this option for filing, SDTM filers can submit a single file containing the FinCEN DOEP XML batch data. The file naming convention is as follows:

Submission type: DOEPXST

Date/Time: This will be a date-time stamp to guarantee filename uniqueness

- Year = YYYY
- Month = MM
- Day = DD
- Hour = hh
- Minute = mm
- Second = ss

Organization name: Custom naming by the submitting organization (e.g. "ABCPreparingFirm")

Extension: xml

Example FinCEN DOEP XML batch file name: DOEPXST.20170609153015.ABCPreparingFirm.xml

Corresponding FinCEN DOEP XML batch Acknowledgement file name: This file name will match the corresponding input FinCEN DOEP XML batch file name with the text "*.ACKED" appended to the end.

For example: DOEPXST.20170609153015.ABCPreparingFirm.xml.ACKED

For more information on how to setup an SDTM connection, please refer to the SDTM Requirements documentation available on the BSA E-Filing System secure side, or you may contact the BSA E-Filing Help Desk at 1-866-346-9478 or via email at BSAEFilingHelp@fincen.gov. The Help Desk is available Monday through Friday from 8 a.m. to 6 p.m. EST. Please note that the Help Desk is closed on Federal holidays.

11. Attachment E – Sample Data

Sample data in XML format associated with this form type is available for download here. It include the following:

- InputBatch – A sample input batch XML
- DiscreteFormExamples – Input discrete entry form samples that correspond with an activity in the input batch XML. The file name references the corresponding Activity Sequence Number (SeqNum) in the batch.
- OutputAcknowledgement – A sample XML acknowledgement file that corresponds with the input batch XML.